**Confidential**

EPSON

ink-jet receipt printer

# TM-J7500/J7600

## Specification

| STANDARD | |
|---|---|
| Rev. No. | B |
| Notes | |

| | |
|---|---|
| Copied Date | , , |
| Copied by | |

**SEIKO EPSON CORPORATION**

MATSUMOTO MINAMI PLANT
2070 KOTOBUKI KOAKA, MATSUMOTO-SHI, NAGANO, 399-8702 JAPAN
PHONE(0263)86-5353 FAX(0263)86-9925

**Confidential**

# REVISION SHEET



Be sure to check the contents before utilizing the specification. This specification has the history shown below.

| Revisions | | Design Section | | | Sheet Rev. No. | | | | | |
|---|---|---|---|---|---|---|---|---|---|---|
| Rev. | Document | WRT | CHK | APL | Sheet | Rev. | Sheet | Rev. | Sheet | Rev. |
| A | Enactment | Oshida | – | Takeuchi | I | A | 13 | A | 37 | A |
| B | Change | Oshida | – | Takeuchi | II | A | 14 | A | 38 | A |
| | | | | | III | A | 15 | A | 39 | A |
| | | | | | IV | A | 16 | A | 40 | A |
| | | | | | V | A | 17 | A | 41 | A |
| | | | | | VI | A | 18 | A | 42 | A |
| | | | | | VII | A | 19 | A | 43 | A |
| | | | | | VIII | A | 20 | A | 44 | A |
| | | | | | | | 21 | A | 45 | A |
| | | | | | | | 22 | A | 46 | A |
| | | | | | | | 23 | A | 47 | A |
| | | | | | | | 24 | A | 48 | A |
| | | | | | 1 | A | 25 | A | 49 | A |
| | | | | | 2 | A | 26 | A | 50 | A |
| | | | | | 3 | A | 27 | A | 51 | A |
| | | | | | 4 | A | 28 | A | 52 | A |
| | | | | | 5 | A | 29 | A | 53 | A |
| | | | | | 6 | A | 30 | A | 54 | A |
| | | | | | 7 | A | 31 | A | 55 | A |
| | | | | | 8 | A | 32 | A | 56 | A |
| | | | | | 9 | B | 33 | A | 57 | A |
| | | | | | 10 | B | 34 | A | 58 | A |
| | | | | | 11 | A | 35 | A | 59 | A |
| | | | | | 12 | A | 36 | A | 60 | A |

| TITLE | Front Part | | | | | | | |
|---|---|---|---|---|---|---|---|---|
| **TM-J7500/J7600** Specification | Cover | Rev. Sheet | Scope | General Features | Table of Contents | Contents | Appendix | Total |
| (STANDARD) | 1 | 4 | -- | 3 | 5 | 169 | 14 | 196 |

**Confidential**

# REVISION SHEET



Be sure to check the contents before utilizing the specification. This specification has the history shown below.

| Revisions | | Design Section | | | Sheet Rev. No. | | | | | |
|---|---|---|---|---|---|---|---|---|---|---|
| Rev. | Document | WRT | CHK | APL | Sheet | Rev. | Sheet | Rev. | Sheet | Rev. |
| A | Enactment | | | | 61 | A | 85 | A | 109 | A |
| B | Change | | | | 62 | A | 86 | A | 110 | A |
| | | | | | 63 | A | 87 | A | 111 | A |
| | | | | | 64 | A | 88 | A | 112 | A |
| | | | | | 65 | A | 89 | A | 113 | A |
| | | | | | 66 | A | 90 | A | 114 | A |
| | | | | | 67 | A | 91 | B | 115 | A |
| | | | | | 68 | A | 92 | B | 116 | A |
| | | | | | 69 | A | 93 | A | 117 | A |
| | | | | | 70 | A | 94 | A | 118 | A |
| | | | | | 71 | A | 95 | A | 119 | A |
| | | | | | 72 | A | 96 | A | 120 | A |
| | | | | | 73 | A | 97 | A | 121 | A |
| | | | | | 74 | A | 98 | A | 122 | A |
| | | | | | 75 | A | 99 | A | 123 | A |
| | | | | | 76 | A | 100 | B | 124 | A |
| | | | | | 77 | A | 101 | A | 125 | A |
| | | | | | 78 | A | 102 | A | 126 | A |
| | | | | | 79 | A | 103 | A | 127 | A |
| | | | | | 80 | A | 104 | A | 128 | A |
| | | | | | 81 | A | 105 | A | 129 | A |
| | | | | | 82 | A | 106 | A | 130 | A |
| | | | | | 83 | A | 107 | A | 131 | A |
| | | | | | 84 | A | 108 | A | 132 | A |

| TITLE | Front Part | | | | | | | |
|---|---|---|---|---|---|---|---|---|
| **TM-J7500/J7600** Specification | Cover | Rev. Sheet | Scope | General Features | Table of Contents | Contents | Appendix | Total |
| (STANDARD) | 1 | 4 | -- | 3 | 5 | 169 | 14 | 196 |

**Confidential**

# REVISION SHEET



Be sure to check the contents before utilizing the specification. This specification has the history shown below.

| Revisions | | Design Section | | | Sheet Rev. No. | | | | | |
|---|---|---|---|---|---|---|---|---|---|---|
| Rev. | Document | WRT | CHK | APL | Sheet | Rev. | Sheet | Rev. | Sheet | Rev. |
| A | Enactment | | | | 133 | A | 157 | A | App.10 | A |
| B | Change | | | | 134 | A | 158 | A | App.11 | A |
| | | | | | 135 | A | 159 | A | App.12 | A |
| | | | | | 136 | A | 160 | A | App.13 | A |
| | | | | | 137 | A | 161 | A | App.14 | A |
| | | | | | 138 | A | 162 | A | | |
| | | | | | 139 | A | 163 | A | | |
| | | | | | 140 | A | 164 | A | | |
| | | | | | 141 | A | 165 | A | | |
| | | | | | 142 | A | 166 | A | | |
| | | | | | 143 | A | 167 | A | | |
| | | | | | 144 | A | 168 | A | | |
| | | | | | 145 | A | 169 | A | | |
| | | | | | 146 | A | | | | |
| | | | | | 147 | A | | | | |
| | | | | | 148 | A | App. 1 | A | | |
| | | | | | 149 | A | App. 2 | A | | |
| | | | | | 150 | A | App. 3 | A | | |
| | | | | | 151 | A | App. 4 | A | | |
| | | | | | 152 | A | App. 5 | A | | |
| | | | | | 153 | A | App. 6 | A | | |
| | | | | | 154 | A | App. 7 | A | | |
| | | | | | 155 | A | App. 8 | A | | |
| | | | | | 156 | A | App. 9 | A | | |

| TITLE | Front Part | | | | | | | |
|---|---|---|---|---|---|---|---|---|
| **TM-J7500/J7600** Specification (STANDARD) | Cover | Rev. Sheet | Scope | General Features | Table of Contents | Contents | Appendix | Total |
| | 1 | 3 | -- | 3 | 5 | 169 | 14 | 195 |

**Confidential**

## REVISION SHEET



| REV. | SHEET | CHANGED CONTENTS |
|---|---|---|
| B | 9 | 1.3.2 Paper Specifications<br>4) Notes on slip paper<br>• Reverse paper feed exceeding 200 mm ….. (added) |
| | 10 | Figure 1.3.2 Printable Area for Slip (changed) |
| | 91 | **ESC F**<br>[Note] (added) |
| | 92 | **ESC K**<br>[Note] • Reverse paper feed exceeding ….. (added) |
| | 100 | **ESC e**<br>[Note] • Reverse paper feed exceeding ….. (added) |

TITLE

**TM-J7500/J7600**

Specification

(STANDARD)

**Confidential**

## CONFIDENTIALITY AGREEMENT

BY USING THIS DOCUMENT, YOU AGREE TO ABIDE BY THE TERMS OF THIS AGREEMENT. **PLEASE RETURN THIS DOCUMENT IMMEDIATELY IF YOU DO NOT AGREE TO THESE TERMS.**

1. This document contains confidential, proprietary information of Seiko Epson Corporation or its affiliates. You must keep such information confidential. If the user is a business entity or organization, you must limit disclosure to those of your employees, agents, and contractors who have a need to know and who are also bound by obligations of confidentiality.
2. On the earlier of (a) termination of your relationship with Seiko Epson, or (b) Seiko Epson's request, you must stop using the confidential information. You must then return or destroy the information, as directed by Seiko Epson.
3. If a court, arbitrator, government agency, or the like orders you to disclose any confidential information, you must immediately notify Seiko Epson. You agree to give Seiko Epson reasonable cooperation and assistance in the negotiation.
4. You may use confidential information only for the purpose of operating or servicing the products to which the document relates, unless you obtain the prior written consent of Seiko Epson for some other use.
5. Seiko Epson warrants that it has the right to disclose the confidential information. SEIKO EPSON MAKES NO OTHER WARRANTIES CONCERNING THE CONFIDENTIAL INFORMATION OR ANY OTHER INFORMATION IN THE DOCUMENT, INCLUDING (WITHOUT LIMITATION) ANY WARRANTY OF TITLE OR NON-INFRINGEMENT. Seiko Epson has no liability for loss or damage arising from or relating to your use of or reliance on the information in the document.
6. You may not reproduce, store, or transmit the confidential information in any form or by any means (electronic, mechanical, photocopying, recording, or otherwise) without the prior written permission of Seiko Epson.
7. Your obligations under this Agreement are in addition to any other legal obligations. Seiko Epson does not waive any right under this Agreement by failing to exercise it. The laws of Japan apply to this Agreement.

## CAUTIONS

1. This document shall apply only to the product(s) identified herein.
2. No part of this document may be reproduced, stored in a retrieval system, or transmitted in any form or by any means, electronic, mechanical, photocopying, recording, or otherwise, without the prior written permission of Seiko Epson Corporation.
3. The contents of this document are subject to change without notice. Please contact us for the latest information.
4. While every precaution has been taken in the preparation of this document, Seiko Epson Corporation assumes no responsibility for errors or omissions.
5. Neither is any liability assumed for damages resulting from the use of the information contained herein.
6. Neither Seiko Epson Corporation nor its affiliates shall be liable to the purchaser of this product or third parties for damages, losses, costs, or expenses incurred by the purchaser or third parties as a result of: accident, misuse, or abuse of this product or unauthorized modifications, repairs, or alterations to this product, or (excluding the U.S.) failure to strictly comply with Seiko Epson Corporation's operating and maintenance instructions.
7. Seiko Epson Corporation shall not be liable against any damages or problems arising from the use of any options or any consumable products other than those designated as Original EPSON Products or EPSON Approved Products by Seiko Epson Corporation.

## TRADEMARKS

EPSON® and ESC/POS® are registered trademarks of Seiko Epson Corporation.
Windows® is a registered trademark of Microsoft Corporation.

General Notice: Other product and company names used herein are for identification purposes only and may be trademarks of their respective companies.

# GENERAL DESCRIPTION

1) This specification applies to the following models of the TM-J7500/J7600 series printer.
Items without any identification in the product name are common to both TM-J7500 and TM-J7600.
* This specification describes only the outline of the general functions and the model-dependent functions of the commands. For detailed specifications and usage of the commands, please refer to the ESC/POS APG (Application Programming Guide) that is separately issued.

2) Features
The TM-J7500/J7600 series printer is a high-end ink-jet POS printer that can print on receipt paper (roll paper) and slip paper. The TM-J7500 is a single-color (black) printing model, and the TM-J7600 is a two-color printing model. The printer has the following features:

<General>

- Small footprint
  - Can print both on roll and slip paper
- Low acoustic noise
  - Performs with low acoustic noise suitable for exclusive stores
- Printing on normal paper
  - Printing on normal paper using ink jet technology brings a low running cost.
- Printability
  - The TM-J7500, using a multi-nozzle, high-density ink jet head (64 nozzles / 180 dpi × 1 line), is designed for high printability.
  - The TM-J7600, using a multi-nozzle high density ink jet head (64 nozzles / 180 dpi × 2 lines) and supporting two-color printing with a two-color ink cartridge, is capable of many types of printing such as logo printing (dpi: dots per 25.4 mm {1"}).
- Interface
  - Various interface boards (EPSON UB series) can be used.
- NV graphics
  - NV user memory: 384KB
- Counter function that enables the printer to be checked by remote maintenance.
- Control commands
  - Based on the ESC/POS® Proprietary Command System.
- Printer driver
  - OPOS ADK and Windows® printer drivers are available.
- Epson customer display (DM-D series) can be connected (only for serial interface model)
- Ink cartridge
  - Equipped with an ink near-end sensor that indicates that the ink is almost ended before the ink end.
    The TM-J7500, uses a large-capacity, single-color ink cartridge, SJIC8(K), that makes the ink's life long and the running operation's cost low.
    The TM-J7600, uses a replaceable ink cartridge, SJIC6(K) or SJIC7(R), (B), (G), that makes the ink's life long.

<Receipt printer section>

- High-speed printing on normal paper
  Approximately 15 lps (69.5 mm paper width, font B)  (lps: lines per second)
- Easy to operate
  - Easy paper loading by just dropping in.
- Autocutter
  - Long life (guaranteed to 1.5 million cuts)
- Sensors for roll paper
  - Paper-end sensor and paper near-end sensor are standard
- Can print various bar codes and two-dimensional code (PDF417)

<Slip printer section>

- High-speed printing with a low acoustic noise
  - Printing with a high speed and a low acoustic noise using ink jet technology.
- A wide slip entrance and mechanical form stopper allow the slip to be set stably.
- A wide slip printing area
  - A 135.6 mm–width print area can use various paper.

Confidential

# Table of Contents


1. GENERAL SPECIFICATIONS ..... 1
1.1 Printing Specifications ..... 1
1.1.1 Printing Specifications (common to paper roll and slip printing) ..... 1
1.1.2 Character Specifications ..... 3
1.2 Receipt Printer Section ..... 6
1.2.1 Autocutter ..... 6
1.2.2 Paper Roll Supply Device ..... 6
1.2.3 Paper Feeding Mechanism ..... 6
1.2.4 Paper Roll Specifications ..... 6
1.2.5 Printable Area ..... 7
1.2.6 Printing and Cutting Positions ..... 8
1.3 Slip Printer Section ..... 9
1.3.1 Paper Feeding Specifications ..... 9
1.3.2 Paper Specifications ..... 9
1.3.3 Printable Area ..... 10
1.4 Ink Cartridges ..... 11
1.4.1 TM-J7500 (Single-Color Print Model) ..... 11
1.4.2 TM-J7600 (Two-Color Print Model) ..... 11
1.4.3 General Specifications for Both Ink Cartridges ..... 11
1.5 General Section ..... 12
1.5.1 Internal Buffer ..... 12
1.5.2 Electrical Characteristics ..... 12
1.5.3 EMI and Safety Standards Applied ..... 12
1.5.4 Reliability ..... 13
1.5.5 Environmental Conditions ..... 13
1.5.6 Installation ..... 15
2. CONFIGURATION ..... 16
2.1 Interfaces ..... 16
2.1.1 RS-232 Serial Interface ..... 16
2.1.2 IEEE 1284 Bidirectional Parallel Interface (Parallel Interface Specifications) ..... 21
2.1.3 Other Interfaces ..... 28
2.2 Connectors ..... 29
2.2.1 Interface Connectors ..... 29
2.2.2 Power Supply Connector ..... 29
2.2.3 Drawer Kick-out Connector (Modular Connector) ..... 30
2.2.4 Customer Display Connector (Available only for the serial interface model) ..... 32
3. FUNCTIONS ..... 33
3.1 List of Commands ..... 33
3.2 Character Code Tables ..... 36
3.2.1 Page 0 (PC437: USA, Standard Europe) (International Character Set: U.S.A.) ..... 36
3.2.2 Page 1 (Katakana) ..... 37
3.2.3 Page 2 (PC850: Multilingual) ..... 38
3.2.4 Page 3 (PC860: Portuguese) ..... 39
3.2.5 Page 4 (PC863: Canadian-French) ..... 40
3.2.6 Page 5 (PC865: Nordic) ..... 41
3.2.7 Page 16 (WPC1252) ..... 42
3.2.8 Page 17 (PC866: Cyrillic #2) ..... 43
3.2.9 Page 18 (PC852: Latin2) ..... 44
3.2.10 Page19 (PC858: Euro) ..... 45
3.2.11 Page 255 (User-defined Page) ..... 46
3.2.12 International Character Sets ..... 47

3.2.13 Extended font A ....48
3.3 Switches and Buttons ....49
3.3.1 Power Button ....49
3.3.2 Panel Button ....49
3.3.3 DIP Switches ....50
3.3.4 Memory Switches ....51
3.4 Indicators ....54
3.4.1 Panel LED Indicators ....54
3.5 Self-test ....56
3.6 Hexadecimal Dumping ....57
3.7 Memory Switches Setting Mode ....58
3.8 Error Processing ....59
3.8.1 Error Types ....59
3.8.2 Printer Operation When an Error Occurs ....61
3.8.3 Data Receive Error ....61
3.9 Paper Sensors ....62
3.9.1 Sensors and LED Indicators ....62
3.9.2 Sensors and Printing ....63
3.10 Printer Cover Sensors and Cover Opening/Closing Operation ....64
3.10.1 Carriage Cover Open Sensor ....64
3.10.2 Opening/Closing the Carriage Cover ....64
3.10.3 Paper Roll Cover Open Sensor ....64
3.10.4 Opening/Closing the Paper Roll Cover ....64
3.11 Ink Cartridge Sensor and Exchanging the Ink Cartridge ....65
3.11.1 Ink Cartridge Sensor ....65
3.11.2 Ink Near-End Sensor ....65
3.11.3 Exchanging the Ink Cartridge ....65
3.12 Print Buffer-full Printing ....65
3.13 Paper Jam Removal ....66
3.13.1 Slip ....66
3.13.2 Paper Roll ....66

4. CASE SPECIFICATIONS ....67
4.1 External Dimensions and Mass ....67
4.2 Color ....67
4.3 External Appearance ....67
4.4 Installing the Customer Display Fixing Plate ....68
4.5 Installation of the Power Supply Unit (PS-180) ....69

5. OPTIONS AND CONSUMABLES ....70
5.1 Standard Accessories ....70
5.2 Options ....70
5.3 Consumables ....70

6. COMMANDS ....71
6.1 Command Notation ....71
6.2 Explanation of Terms ....71
6.3 Control Commands ....73
HT ....73
LF ....73
FF ....73
CR ....74
CAN ....74
DLE EOT *n [a]* ....75
DLE ENQ *n* ....80
DLE DC4 *fn m t* (*fn* = 1) ....81

DLE DC4 *fn a b* (*fn* = 2) ..... 82
DLE DC4 *fn m* (*fn* = 7) ..... 83
DLE DC4 *fn d1…d7* (*fn* = 8) ..... 84
ESC FF ..... 84
ESC SP *n* ..... 85
ESC ! *n* ..... 85
ESC $ *nL nH* ..... 86
ESC % *n* ..... 86
ESC & y *c1 c2 [x1 d1...d(y×x1)]...[xk d1...d(y×xk)]* ..... 86
ESC . *m nL nH d1...dk* ..... 87
ESC – *n* ..... 87
ESC 2 ..... 88
ESC 3 *n* ..... 88
ESC < ..... 88
ESC = *n* ..... 89
ESC ? *n* ..... 89
ESC @ ..... 90
ESC D *n1…n*k *NUL* ..... 90
ESC E *n* ..... 90
ESC F *n* ..... 91
ESC G *n* ..... 91
ESC J *n* ..... 91
ESC K *n* ..... 92
ESC L ..... 92
ESC M *n* ..... 92
ESC R *n* ..... 93
ESC S ..... 93
ESC T *n* ..... 94
ESC U *n* ..... 94
ESC W *xL xH yL yH dxL dxH dyL dyH* ..... 95
ESC \ *nL nH* ..... 96
ESC *a n* ..... 96
ESC c 0 *n* ..... 97
ESC c 1 *n* ..... 97
ESC c 3 *n* ..... 98
ESC c 4 *n* ..... 99
ESC c 5 *n* ..... 99
ESC d *n* ..... 100
ESC e *n* ..... 100
ESC *f t1 t2* ..... 100
ESC p *m t1 t2* ..... 101
ESC q ..... 101
ESC t *n* ..... 102
ESC { *n* ..... 102
GS ! *n* ..... 103
GS $ *nL nH* ..... 104
GS ( A *pL pH n m* ..... 104
GS ( B *pL pH m [a1 b1]...[ak bk]* ..... 105
GS ( C *pL pH m fn b [c1 c2] [d1...dk]* ..... 106
<Function 0> GS ( C *pL pH m fn b c1 c2* (*fn* = 0, 48) ..... 107
<Function 1> GS ( C *pL pH m fn b c1 c2 d1...dk* (*fn* = 1, 49) ..... 107
<Function 2> GS ( C *pL pH m fn b c1 c2* (*fn* = 2, 50) ..... 107
<Function 3> GS ( C *pL pH m fn b* (*fn* = 3, 51) ..... 108
<Function 4> GS ( C *pL pH m fn b* (*fn* = 4, 52) ..... 108

<Function 5> GS ( C *pL pH m fn b* (*fn* = 5, 53)....108
<Function 6> GS ( C *pL pH m fn b d1 d2 d3* (*fn* = 6, 54)....108
GS ( D *pL pH m [a1 b1]...[ak bk]* ....109
GS ( E *pL pH fn [parameters]* ....110
<Function 1> GS ( E *pL pH fn d1 d2* (*fn* = 1)....111
<Function 2> GS ( E *pL pH fn d1 d2 d3* (*fn* = 2)....111
<Function 3> GS ( E *pL pH fn [a1 b18...b11]...[ak bk8...bk1]* (*fn* = 3) ....112
<Function 4> GS ( E *pL pH fn a* (*fn* = 4)....114
<Function 5> GS ( E *pL pH fn [a*1 *n1L n1H]...[ak nkL nkH]* (*fn* = 5) ....114
<Function 6> GS ( E *pL pH fn a* (*fn* = 6)....114
<Function 7> GS ( E *pL pH fn a d1 d2* (*fn* = 7)....115
<Function 8> GS ( E *pL pH fn y c1 c2 [x d1...d(y × x) ]k* (*fn* = 8)....115
<Function 9> GS ( E *pL pH fn x c1 c2 [y d1...d(x × y) ]k* (*fn* = 9)....116
<Function 10> GS ( E *pL pH fn c1 c2* (*fn* = 10) ....116
<Function 11> GS ( E *pL pH fn a d1...dk* (*fn* = 11) ....117
<Function 12> GS ( E *pL pH fn a* (*fn* = 12)....118
GS ( G *pL pH* fn *[parameters]*....119
<Function 32> GS ( G *pL pH fn m* (*fn* = 32) ....120
<Function 80> GS ( G *pL pH fn m* (*fn* = 80) ....121
<Function 81> GS ( G *pL pH fn m* (*fn* = 81) ....121
<Function 82> GS ( G *pL pH fn m* (*fn* = 82) ....121
<Function 83> GS ( G *pL pH fn m* (*fn* = 83) ....122
<Function 84> GS ( G *pL pH fn m* (*fn* = 84) ....122
<Function 85> GS ( G *pL pH fn m* (*fn* = 85) ....122
GS ( H *pL pH fn [parameters]*....123
<Function 48> GS ( H *pL pH fn m d1 d2 d3 d4* (*fn* = 48)....123
<Function 49> GS ( H *pL pH fn m d* (*fn* = 49)....124
GS ( K *pL pH fn [parameters]* ....126
<Function 48> GS ( K *pL pH fn m* (*fn* = 48)....127
GS ( L *pL pH m fn [parameters]* ....128
GS 8 L *p1 p2 p3 p4 m fn [parameters]* ....128
<Function 48> GS ( L *pL pH m fn* (*fn* = 0, 48) ....130
<Function 50> GS ( L *pL pH m fn* (*fn* = 2, 50) ....130
<Function 51> GS ( L *pL pH m fn* (*fn* = 3, 51) ....130
<Function 52> GS ( L *pL pH m fn* (*fn* = 4, 52) ....130
<Function 64> GS ( L *pL pH m fn d1 d2* (*fn* = 64) ....131
<Function 65> GS ( L *pL pH m fn d1 d2 d3* (*fn* = 65) ....131
<Function 66> GS ( L *pL pH m fn kc1 kc2* (*fn* = 66)....131
<Function 67> GS ( L *pL pH m fn a kc1 kc2 b xL xH yL yH [c d1…dk]1…[c d1....dk]b* ....132
<Function 68> GS ( L *pL pH m fn a kc1 kc2 b xL xH yL yH [c d1…dk]1…[c d1....dk]b* ....133
<Function 69> GS ( L *pL pH m fn kc1 kc2 x y* (*fn* = 69) ....134
<Function 80> GS ( L *pL pH m fn d1 d2* (*fn* = 80) ....134
<Function 81> GS ( L *pL pH m fn d1 d2 d3* (*fn* = 81) ....134
<Function 82> GS ( L *pL pH m fn kc1 kc2* (*fn* = 82)....135
<Function 83> GS ( L *pL pH m fn a kc1 kc2 b xL xH yL yH [c d1...dk]1...[c d1...dk]b* ....135
<Function 84> GS ( L *pL pH m fn a kc1 kc2 b xL xH yL yH [c d1...dk]1...[c d1...dk]b* ....136
<Function 85> GS ( L *pL pH m fn kc1 kc2 x y* (*fn* = 85) ....137
<Function 112> GS ( L *pL pH m fn a bx by c xL xH yL yH d1...dk* (*fn* = 112) ....137
<Function 113> GS ( L *pL pH m fn a bx by c xL xH yL yH d1...dk* (*fn* = 113) ....138
GS ( M *pL pH fn m*....139
<Function 1> GS ( M *pL pH fn m* (*fn* = 1,49) ....140
<Function 2> GS ( M *pL pH fn m* (*fn* = 2,50) ....140
<Function 3> GS ( M *pL pH fn m* (*fn* = 3,51) ....140
GS ( N *pL pH fn [parameters]*....141

<Function 48> GS ( N *pL pH fn m* (*fn* = 48)....141
<Function 49> GS ( N *pL pH fn m* (*fn* = 49)....142
<Function 50> GS ( N *pL pH fn m a* (*fn* = 50)....142
GS ( P *pL pH fn [*parameters*]* ....143
<Function 48> GS ( P *pL pH fn wxL wxH wyL wyH oxL oxH c* (*fn* = 48)....143
GS ( k *pL pH cn fn [parameters]*....145
<Function 065> GS ( k *pL pH cn fn n* (*cn* = 48, *fn* = 65)....146
<Function 066> GS ( k *pL pH cn fn n* (*cn* = 48, *fn* = 66)....146
<Function 067> GS ( k *pL pH cn fn n* (*cn* = 48, *fn* = 67)....147
<Function 068> GS ( k *pL pH cn fn n* (*cn* = 48, *fn* = 68)....147
<Function 069> GS ( k *pL pH cn fn n* (*cn* = 48, *fn* = 69)....148
<Function 070> GS ( k *pL pH cn fn m* (*cn* = 48, *fn* = 70)....149
<Function 080> GS ( k *pL pH cn fn m d1…dk* (*cn* = 48, *fn* = 80) ....149
<Function 081> GS ( k *pL pH cn fn m* (*cn* = 48, *fn* = 81)....150
<Function 082> GS ( k *pL pH cn fn m* (*cn* = 48, *fn* = 82)....150
GS B *n* ....151
GS H *n* ....151
GS I *n*....151
GS L *nL nH* ....153
GS P *x y* ....153
GS T *n* ....154
<A> GS V *m*....154
<B> GS V *m n*....154
GS W *nL nH* ....155
GS \ *nL nH* ....155
GS *a n*....156
GS *fn*....159
GS g 0 *m nL nH* ....159
GS g 2 *m nL nH* ....160
GS h *n*....161
GS j *n*....161
<A> GS k *m d1...dk NUL* ....163
<B> GS k *m n d1...dn* ....163
GS r *n* ....164
GS w *n* ....166
6.4 Obsolete Commands ....167
GS ¸ *x y d1...dk* [obsolete command]....167
GS / *m* [obsolete command] ....167
GS Q 0 *m xL xH yL yH d1...dk* [obsolete command] ....168
GS v 0 *m xL xH yL yH d1...dk* [obsolete command] ....169

APPENDIX A: MISCELLANEOUS NOTES .... App.1
APPENDIX B: CHANGING THE INK CARTRIDGE .... App.5
APPENDIX C: INSTALLING OR REPLACING THE PAPER ROLL .... App.6
APPENDIX D: ADJUSTING THE PAPER ROLL NEAR-END SENSOR LOCATION .... App.7
APPENDIX E: DESCRIPTION OF THE MAINTENANCE COUNTERS.... App.9
APPENDIX F: NOTES ON USING THE DRAWER KICK-OUT CONNECTOR.... App.11
APPENDIX G: NOTES ON TURNING THE PRINTER'S POWER ON/OFF .... App.12
APPENDIX H: REPLACING THE PUMP UNIT AND THE INK SUPPLY UNIT.... App.13
APPENDIX I: CHANGING THE PAPER WIDTH .... App.14

# 1. GENERAL SPECIFICATIONS

(Items without any identification in the product name are common to both two-color and single-color models.)

## 1.1 Printing Specifications

### 1.1.1 Printing Specifications (common to paper roll and slip printing)

1) Printing method: Serial ink-jet dot matrix
TM-J7500 single-color model: Single-color printing
TM-J7600 two-color model: Two-color printing

2) Head nozzle: TM-J7500 single-color model:
64 nozzles × 1 line,
Nozzle pitch: Approximately 0.141 mm {1/180"}

TM-J7600 two-color model:
64 nozzles × 2 lines,
Corresponds to one line for one color,
Nozzle pitch: Approximately 0.141 mm {1/180"}

3) Printing direction: Bidirectional logic seeking

4) Printable area: Refer to Table 1.1.1, 1.1.2, 1.1.3.

6) Characters per line: Refer to Table 1.1.1, 1.1.2, 1.1.3

7) Printing speed: Refer to Table 1.1.4

8) Paper feeding speed: Approximately 150 mm/s {5.9"/s}
(with continuous paper feed)

9) Print control mode: Refer to Table 1.1.5.

10) Line spacing: Approximately 4.23 mm {1/6"} (default),
Approximately 3.18 mm {1/8"}; possible to print in three lines simultaneously, selectable by a command.

**Table 1.1.1 Characters per Line and Printable Area for Roll Paper**

| Paper width (mm) | 57.5 {2.26"} | 69.5 {2.74"} | 76 {2.99"} | 82.5 {3.25"} |
|---|---|---|---|---|
| Number of dots for printing (dots) | 360 | 432 | 480 | 512 |
| Printable width (mm) {"} | 50.8 {2.00"} | 61 {2.40"} | 67.7 {2.67"} | 72.2 {2.84"} |
| Characters per line | | | | |
| Font A (12 × 24) | 30 | 36 | 40 | 42 |
| Font B (9 × 17) | 40 | 48 | 53 | 56 |
| * Font A (11 × 24) | 32 | 39 | 43 | 46 |
| * Font B (8 × 17) | 45 | 54 | 60 | 64 |
| Extended font A (15 × 24) | 24 | 28 | 32 | 34 |

*: Selectable by a memory switch

**Table 1.1.2 Characters per Line and Printable Area for Slips**

| | | |
|---|---|---|
| Number of dots for printing (dots) | | 960 |
| Printable width (mm) | | 135.6 {5.34"} |
| Character per line | Font A (12 × 24) | 80 |
| | Font B (9 × 17) | 106 |
| | * Font A (11 × 24) | 87 |
| | * Font B (8 × 17) | 120 |
| | Extended font A (15 × 24) | 64 |

*: Selectable by a memory switch

**Table 1.1.3 General Printing Speed**

| Print control mode | Font | | Paper width (mm) | | | | Slip (mm) |
|---|---|---|---|---|---|---|---|
| | | | 57.5 {2.26"} | 69.5 {2.74"} | 76 {2.99"} | 82.5 {3.25"} | 135.6 {5.34"} |
| Normal | Font A (6 lpi) | lps | 7.4 | 6.7 | 6.3 | 6.0 | 4.0 |
| | Font B (8 lpi) | lps | 10.7 | 9.5 | 8.9 | 8.6 | 5.8 |
| | Graphics | mm/s | 32 | 29 | 27 | 26 | 18 |
| High speed | Font A (6 lpi) | lps | 11.6 | 10.5 | 10.1 | 9.7 | 6.9 |
| | Font B (8 lpi) | lps | 16.4 | 15.0 | 14.3 | 13.8 | 9.9 |
| | Graphics | mm/s | 50 | 45 | 43 | 41 | 29 |
| Economy | Font A (6 lpi) | lps | 11.6 | 10.5 | 10.1 | 9.7 | 6.9 |
| | Font B (8 lpi) | lps | 16.4 | 15.0 | 14.3 | 13.8 | 9.9 |
| | Graphics | mm/s | 50 | 45 | 43 | 41 | 29 |

[lpi: lines per 25.4 mm {1"}]

[lps: lines per second]

NOTES:
1. All values listed above are the printing speed without character modification when the printing is performed continuously for all columns without cleaning.
2. Printing speed may be slower, depending on the data transmission speed and the combination of control commands. If the data transmission speed is slow, the printing becomes intermittent. Therefore, it is recommended to use high-speed data transmission.

**Table 1.1.4 Print Control Mode**

| Print control mode | Number of carriage passes (*1) | Vertical resolution (dpi) | Horizontal resolution (dpi) | Dot structure (number of pulses to the head) |
|---|---|---|---|---|
| Normal | 1 | 180 | 180 | 6 |
| High speed | 1 | 180 | 180 | 3 |
| Economy | 1 | 180 | 180 | 2 |

[dpi: dots per 25.4 mm {1"}]

*1 Pass: To move the carriage from the left to the right or from the right to the left.

NOTES:
- Normal mode: Print control mode that prints in fine (high-density) quality.
- High-speed mode: Print control mode that saves ink, prints at a high speed, and is selected as default.
- Economy mode: Print control mode that saves more ink than high-speed mode.

### 1.1.2 Character Specifications

1) Number of characters:

| | |
|---|---|
| Alphanumeric characters: | 95 |
| Extended graphics: | 128 × 11 pages (including one user-defined page) |
| International characters: | 37 |
| Extended font A: | 16 (including space) |

2) Character structure:

| | | |
|---|---|---|
| Font A: | 12 × 24 | 15 cpi |
| Font B: | 9 × 17 | 20 cpi |
| Extended font A: | 15 × 24 | 12 cpi |

Using the memory switch for characters per ine:

| | | |
|---|---|---|
| Font A: | 11 × 24 | 16.3 cpi |
| Font B: | 8 × 17 | 22.5 cpi |
| Extended font A: | 15 × 24 | 12 cpi |

[cpi: characters per 25.4 mm {1"}]

NOTES:
- The number of characters (columns) per line is selectable by a memory switch.
- Selection of characters per line can be performed for receipt and slip respectively.
- If memory switch changing of characters per line is performed, one dot on the right side of a graphic character or user-defined character may be missed.
- Extended font A is same as the OCR-B font: however, the optical font reading is not guaranteed.
- The character width of the extended font A is fixed to 15 dots regardless of the memory switch settings.

3) Character size (character area):

**Table 1.1.6 Character Size for ANK/Multilingual Model**

| | Standard | Double-height | Double-width | Double-width / Double-height |
|---|---|---|---|---|
| | W × H (mm) | W × H (mm) | W × H (mm) | W × H (mm) |
| Font A (12 × 24) | 1.69 × 3.38 | 1.69 × 6.77 | 3.38 × 3.38 | 3.38 × 6.77 |
| Font B (9 × 17) | 1.27 × 2.40 | 1.27 × 4.80 | 2.54 × 2.40 | 2.54 × 4.80 |
| Font A (11 × 24) | 1.55 × 3.38 | 1.55 × 6.77 | 3.10 × 3.38 | 3.10 × 6.77 |
| Font B (8 × 17) | 1.13 × 2.40 | 1.13 × 4.80 | 2.26 × 2.40 | 2.26 × 4.80 |
| Extended font A (15 × 24) | 2.12 × 3.38 | -- | -- | -- |

NOTES:
1. The actual print character may be smaller than the size shown in the table above, because the above size includes spaces in the font.
2. Characters can be scaled up to 64 times as large as the standard size.
3. Character size not including the horizontal spacing in the standard scale is as follows:
   Font A: 1.41 (W) × 3.38 (H) mm
   Font B: 0.99 (W) × 2.40 (H) mm
4. ANK = alphanumeric

4) Bar code printing

The following types of bar codes can be printed:

UPC-A
UPC-E
JAN13 (EAN13)
JAN8 (EAN8)
CODE39
ITF
CODABAR (NW7)
CODE93
CODE128

NOTES:
1. When bar code printing is selected, the printer automatically sets the print control mode to normal and unidirectional printing.
2. In page mode containing a bar code, regardless of any settings for the print control mode, all print areas including the bar code are set to normal mode and unidirectional print.
3. In a ladder bar code print, it is recommended to set 0.423 or more (*n* = 3 of **GS w**) as the minimum module length.
4. Never print a ladder bar code on a slip.

5) Two-dimensional code printing

The following two-dimensional code can be printed:

PDF417

NOTES:
1. When two-dimensional code printing is selected, the printer automatically sets the print control mode to normal and unidirectional printing.
2. In page mode containing a two-dimensional code, regardless of any settings for the print control mode, all print areas including the two-dimensional code are set to normal mode and unidirectional print.
3. In a ladder bar code print, it is recommended to set 0.423 or more (*n* = 3 of **GS ( k** <Function 067>) as the minimum module length.
4. Never print a two-dimensional code on a slip.

## 1.2 Receipt Printer Section

### 1.2.1 Autocutter

1) Cutting method: Circular-type cutting method
2) Cutting type: One point left uncut (called “partial cut”).

### 1.2.2 Paper Roll Supply Device

1) Supply method: Easy-to-load drop-in mechanism
2) Paper roll end sensor: By microswitch
3) Near-end sensor: By microswitch (adjusted by users)
4) Paper roll spool diameter: Inside: 10 mm {0.39"} or more
5) Near-end adjustment mechanism:
   Adjustable with an adjusting screw (Refer to Appendix D)
6) Paper width selection: Any of four types of paper width – 57.5, 69.5, 76, 82.5 mm {2.26", 2.74", 2.99", 3.25"} can be selected.

NOTES:
- To change the paper width, you must set the memory switch appropriately.
- When the paper width is changed from narrow to wide, the autocutter blade must be replaced with a new one, since the ends of the blade are worn even though they have not been used.

### 1.2.3 Paper Feeding Mechanism

1) Paper feeding method: Friction feed method
2) Paper feeding direction: Unidirectional
3) Minimum paper feeding pitch: Possible to set 0.1411 mm {1/180"} minimum
4) Continuous paper feeding speed:
   Approximately 150 mm/s {5.9"/s}, 35.4 lps {1/6" feed} (lps: lines per second)

### 1.2.4 Paper Roll Specifications

1) Paper type: Normal quality paper (only single-ply rolls can be used)
2) Form: Paper roll
3) Paper width: Can be selected any of the following:
   82.5 ± 0.5 mm
   76 ± 0.5 mm
   69.5 ± 0.5 mm
   57.5 ± 0.5 mm
4) Paper thickness: 0.06 – 0.09 mm
5) Paper weight: 52.3 – 64.0 g/m$^2$ {14 – 17 lb} (JIS P8124)
   (45 ~ 55 kg / 1000 pcs / 788 mm × 1091 mm)
6) Spool diameter: Inside: 10 mm {0.39"} or more
7) Paper roll diameter: Outside: 83 mm {3.27"} or less

### 1.2.5 Printable Area

1) Printable area

Refer to Figure 1.2.1. and Table 1.2.1

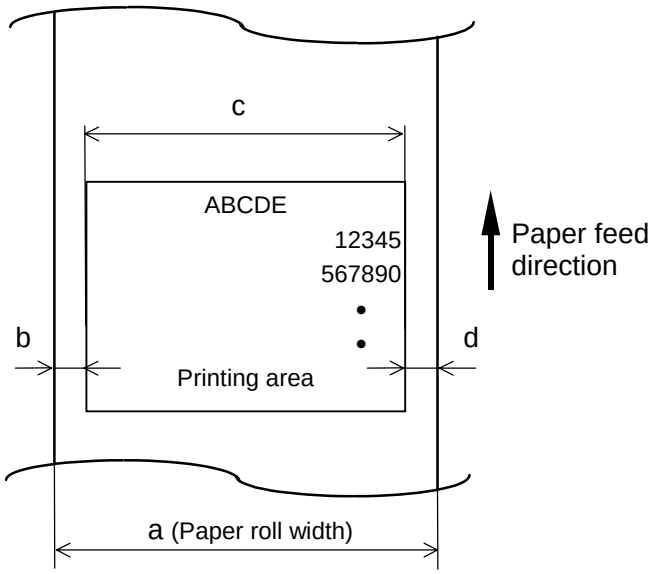


**Figure 1.2.1 Printable Area**

**Table 1.2.1 Dimensions in Figure 1.2.1** [Units: mm]

| a (paper roll width) | b (left margin) | c (printable area) | d (right margin) |
|---|---|---|---|
| 57.5 {2.26"} | (3.4) {0.13"} | 50.8 {2.00"} (360 dots) | 3.3 {0.13"} |
| 69.5 {2.74"} | (4.2) {0.17"} | 61.0 {2.40"} (432 dots) | 4.3 {0.17"} |
| 76 {2.99"} | (4.3) {0.17"} | 67.7 {2.67"} (480 dots) | 4.2 {0.17"} |
| 82.5 {3.25"} | (6.0) {0.24"} | 72.2 {2.84"} (512 dots) | 4.3 {0.17"} |

### 1.2.6 Printing and Cutting Positions

1) Relationship between the printing and cutting positions. (Refer to Figure 1.2.2).

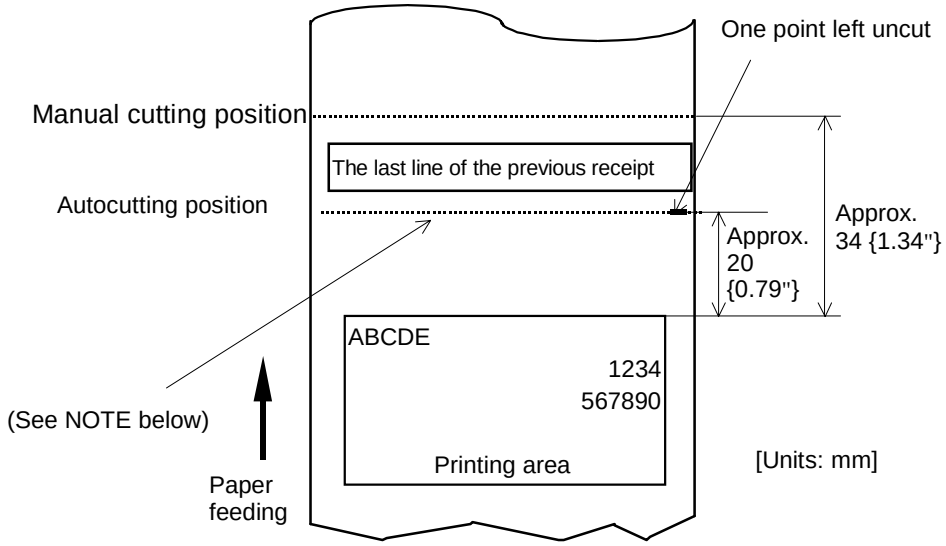


**Figure 1.2.2 Printing and Cutting Positions**

NOTE: Numeric values used here are typical values; the values may vary slightly as a result of paper slack or variations in the paper. Take this note into account when setting the cutting position of the autocutter.

## 1.3 Slip Printer Section

### 1.3.1 Paper Feeding Specifications

1) Feeding method: Friction feed

2) Feeding direction: Bidirectional (possible to feed in forward and reverse direction)

3) Feeding pitch: Approximately 0.1411 mm {1/180"}

4) Continuous feeding speed: Approximately 150 mm/s {5.9"/s}
35.4 lps {1/6" feed)
[lps: lines per second]

### 1.3.2 Paper Specifications

1) Paper types: Normal paper

2) Paper sizes: 68 – 230 mm (W) × 68 – 297 mm (L) {2.7 – 9.1"(W) × 2.7 – 11.7"(L)}

NOTE: The minimum paper size is 68 × 152 mm {2.7 – 6.0"}.

3) Paper thickness: 0.09 mm – 0.2 mm {0.0035 – 0.0079"} (only single-ply can be used).

4) Notes on slip paper

- The slip paper must be flat, without curls or wrinkles, especially at the top edges. Otherwise, the paper may rub against the nozzles and become dirty.
- Since the slip BOF sensor uses a photo sensor, do not use paper that has holes at the sensor position, or is translucent.
- Since the slip TOF sensor uses a reflective photo sensor and it detects from the back of slip paper, do not use paper that has holes or dark portions with low reflection (less than 40% reflection) at the sensor position.
- Reverse paper feed exceeding 200 mm {7.9"} must be prohibited.

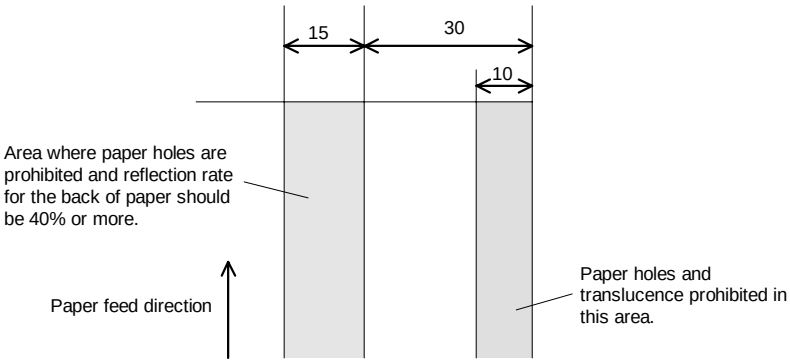


[Units: mm (All the numeric values are typical.)]

**Figure 1.3.1 Area with No Paper Holes and Low Reflection**

### 1.3.3 Printable Area

- Top margin: 5 mm
- Bottom margin: 18.4 mm
- Printing width: 135.6 mm
- Right margin: 4.3 mm

Note that the values above are typical.

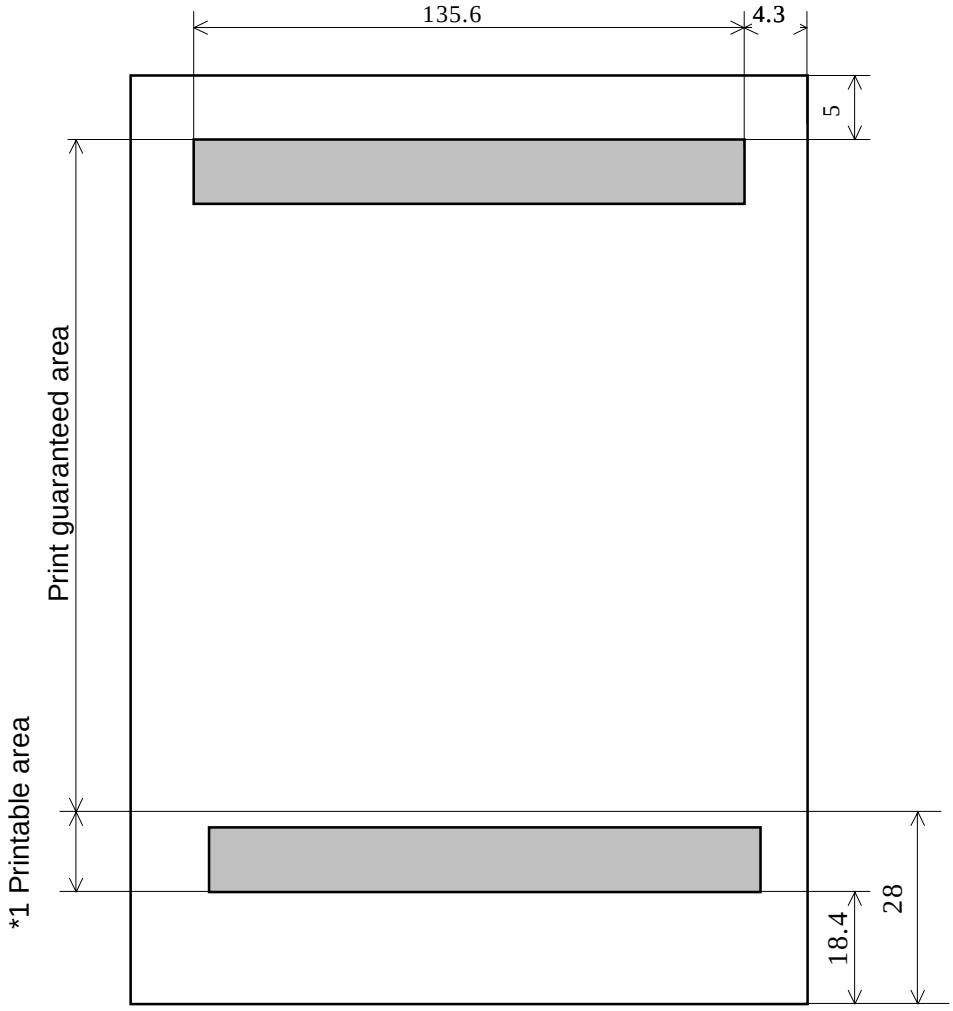


**Figure 1.3.2 Printable Area for Slip**

NOTE: *1: Paper feed pitch in the printable area may fluctuate.

## 1.4 Ink Cartridges

### 1.4.1 TM-J7500 (Single-Color Print Model)

1) Type of cartridge: Exclusive ink cartridge

2) Color of ink: SJIC8 (K): Black

3) Life of ink: 20,000,000 characters
(Using font B with EPSON standard print pattern in economy mode)

### 1.4.2 TM-J7600 (Two-Color Print Model)

1) Type of cartridge: Exclusive ink cartridge
For color 1: SJIC6 (K)
For color 2: SJIC7 (R), (B), (G)

2) Color of ink] SJIC6 (K): Black
SJIC7 (R): Red
SJIC7 (B): Blue
SJIC7 (G): Green

3) Life of ink: Total approximately 15,000,000 characters with SJIC6 and SJIC7
(Using font B with EPSON standard print pattern in economy mode)

### 1.4.3 General Specifications for Both Ink Cartridges

1) Expiration data

Use up the cartridge within six months after opening the packing. (when kept at room temperature) and use up the cartridge within two years after production (when stored at room temperature). This two years includes six months after opening the packing.
The expiration date for two years after production is printed on the individual box containing the ink cartridge and on the ink cartridge itself.

2) Other

Refer to the ink cartridge SJIC6, 7, 8 specifications for details.

## 1.5 General Section

### 1.5.1 Internal Buffer

1) Receive buffer: 4KB

2) User-defined buffer (both for user-defined characters and downloaded bit images): 12KB

3) NV graphics + NV user memory: 384KB

### 1.5.2 Electrical Characteristics

1) Power source: Optional AC adapter PS-180

2) Supply voltage: 24 V ± 2.4 V

3) Current consumption: (except when the drawer kick-out is used.)

Operating: Mean: Approximately 0.5 A
(Printing alphanumeric characters in font A, all columns)
Peak: Approximately 2.7 A

Stand by: Mean: Approximately 80 mA

### 1.5.3 EMI and Safety Standards Applied

EMC is measured using SEIKO EPSON's power supply PS-180.

1) Europe: CE marking:
Directive: 89/336/EEC
EN55022 Class B
EN55024
IEC61000-4-2
IEC61000-4-3
IEC61000-4-4
IEC61000-4-5
IEC61000-4-6
IEC61000-4-11
Safety standards:
TÜV (EN60950)

2) North America: EMI: FCC / ICES-003 Class A
Safety standards: UL60950 / CSA C22.2 No.60950

3) Japan: EMI: VCCI Class A

4) Oceania: EMC: AS/NZS 3548 Class B

### 1.5.4 Reliability

1) Life:

| | | |
|---|---|---|
| Mechanism: | Receipt: | 15,000,000 lines |
| | Slip: | 5,000,000 lines |
| Print head: | 1600 million shots/nozzle<br>(Shots are defined as the numbers of pulses energized for the print head) | |
| Autocutter: | 1,500,000 cuts<br>(End of life: the printer is defined to have reached the end of its life when it reaches the beginning of the wearout period.) | |

2) MTBF: 180,000 hours
(Failure is defined as a random failure occurring during the random failure period.)

3) MCBF: 50,000,000 lines
(This is an average failure interval based on failures relating to wearout and random failures up to the life of 20,000,000 lines (receipt: 15,000,000 lines + slip: 5,000,000 lines))

### 1.5.5 Environmental Conditions

1) Temperature and Humidity:

| | |
|---|---|
| Printing: | 10 to 35°C {50 to 95°F}, 20 - 80% RH (non-condensing)<br>(Shaded area in Figure 1.5.1.) |
| Operating: | 5 to 40°C {41 to 104°F}, 20 - 80% RH (non-condensing)<br>(Area drawn with a solid line in Figure 1.5.1.) |
| Storage: | a) When packed (ink not installed)<br>-20 to 60°C {-4 to 140°F}, 5 - 85% RH (non-condensing)<br>(within 120 hours at -20°C {68°F} or 60°C {140°F}<br>b) When ink is loaded<br>-20 to 40°C {-4 to 104°F}, 20 - 85% RH |

2) Maximum absolute rated temperature: 70°C {158°F}
(The printer must be kept at or below 70°C {158°F} whenever it is operating or in storage.)

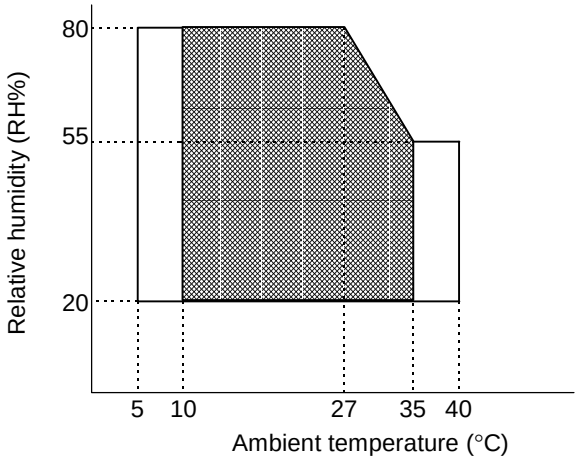


**Figure 1.5.1 Operating Temperature and Humidity Range**

3) Operating pressure: 700 - 1050 hPa
(approximately -20 m to 2000 m {-66 to 6562 feet} in height above sea level)

4) Vibration resistance:

| | | |
|---|---|---|
| When packed: | Frequency: | 5 to 55 Hz |
| | Acceleration: | Approximately 19.6 m/s$^2$ {2G} |
| | Sweep: | 10 minutes (half cycle) |
| | Duration: | 1 hour |
| | Directions: | x, y, and z |

EPSON has confirmed that no unexpected conditions will occur in operation of the mechanism after vibration under the above conditions.

5) Impact resistance:

| | | |
|---|---|---|
| When packed: | Package: | EPSON standard package |
| | Height: | 60 cm {23.6"} |
| | Directions: | 1 corner, 3 edges, and 6 surfaces |
| When unpacked: | Height: | 5 cm {2"} |
| | Directions: | Lift one edge and release it (for all 4 edges). |

EPSON has confirmed that no unexpected conditions will occur in operation of the mechanism after impact under the above conditions.

6) Acoustic noise: Operating: Approximately 50 dB (ANSI bystander position)
(when using the autocutter in normal mode)

### 1.5.6 Installation

This printer must be installed horizontally, basically.
However, to improve user's operateability, the printer can be set up on a tilt of not more than I0 degrees.
The tilting direction must be only as shown in Figure 1.5.2. If the printer is tilted, prepare a plain plate to hold the printer and tilt the printer with the plate.
Also, for safety, make sure that the printer will not dropped.

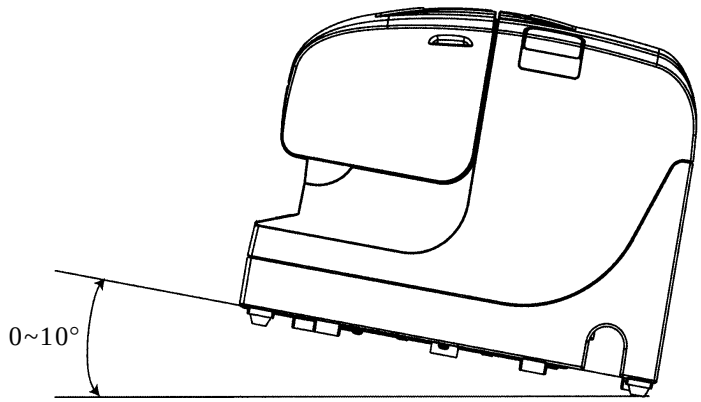


**Figure 1.5.2 Printer Installation**

# 2. CONFIGURATION

## 2.1 Interfaces

### 2.1.1 RS-232 Serial Interface

2.1.1.1 Specifications (RS-232–compatible)

| | |
|---|---|
| Data transmission: | Serial |
| Synchronization: | Asynchronous |
| Handshaking: | DTR/DSR or XON/XOFF control |
| Signal levels: | MARK = -3 to -15 V: Logic "1" / ON<br>SPACE = +3 to +15 V: Logic "0" / OFF |
| Data word length: | 7 or 8 bits |
| Transmission speed: | 2400, 4800, 9600, 19200, 38400, 57600, 115200 bps<br>(bps: bits per second) |
| Parity settings: | None, even, odd |
| Stop bits: | 1 or more |
| Connector (printer side): | Female DSUB-25 pin connector |
| | The data word length, transmission speed, and parity depend on the DIP switch settings or the memory switch set with the **GS ( E** command. (Refer to Section 3.3.3.) The number of stop bits for the printer side is fixed to 1. |

2.1.1.2 Switching between online and offline

The printer does not have an online/offline switch. The printer goes offline:

1) Between when the power is turned on or the printer is reset and when the printer mechanism is finished initializing.
2) During the self-test.
3) When the paper roll cover is open.
4) When the carriage cover is open.
5) During paper feeding using the paper FEED button.
6) When the printer stops printing due to a paper-end (in cases when an empty paper supply is detected by either the paper roll end detector or the paper roll near-end detector with a printing halt feature set by **ESC c 4**).
7) When an error has occurred.
8) When head cleaning is performed.
9) When no ink cartridge is installed.
10) Between when an ink cartridge is exchanged due to the ink end detection and when the ink end is canceled.
11) When the printer is waiting for insertion of another slip to be printed while waiting for removal of a cut sheet.
12) After performing the power off sequence (**DLE DC4** (*fn* = 2)).

2.1.1.3 Interface connector terminal assignments and signal functions

Interface connector terminal assignments and signal functions are described in Table 2.1.1.

**Table 2.1.1 Printer Interface Connector Status and Signals**

| Pin no. | Signal name | Signal direction | Function |
|---|---|---|---|
| 1 | FG | — | Frame ground |
| 2 | TXD | Output | Transmit data |
| 3 | RXD | Input | Receive data |
| 4 | RTS | Output | Memory switch Msw 1-6 OFF: Same as DTR signal (pin 20)<br>Memory switch Msw 1-6 ON: Logical product of DTR signals of DM-D and TM (if both are SPACE, the printer can receive data (SPACE).) |
| 6 | DSR | Input | This signal indicates whether the host computer can receive data.<br>SPACE indicates that the host computer can receive data, and MARK indicates that the host computer cannot receive data.<br>When DTR/DSR control is selected, the printer transmits data after confirming this signal (except when transmitting data by **DLE EOT, FS ( e, GS a,** and **GS j**).<br>When XON/XOFF control is selected, the printer does not check this signal.<br>Changing the setting of memory switch Msw 1-7 enables this signal to be used as a reset signal for the printer (refer to Section 3.3.3).<br>The printer is reset when the signal remains MARK for 1 ms or more (refer to Section 2.1.1.16). |
| 7 | SG | — | Signal ground |
| 20 | DTR | Output | 1) When DTR/DSR control is selected, this signal indicates whether the printer is busy. SPACE indicates that the printer is ready to receive data, and MARK indicates that the printer is busy. The busy condition can be changed by using memory switch Msw 1-3 as follows (refer to Section 3.3.4): |

| | Printer status | Memory switch Msw 1-3 status | |
|---|---|---|---|
| | | ON | OFF |
| Offline | 1. Between when the power is turned on or the printer is reset and when the printer becomes ready to receive data. | BUSY | BUSY |
| | 2. Between when the printer becomes ready to receive data and when the printer mechanism is finished initializing. | — | BUSY |
| | 3. During the self-test. | BUSY | BUSY |
| | 4. When the cover is open. | — | BUSY |
| | 5. During paper feeding using the paper FEED button. | — | BUSY |
| | 6. When the printer stops printing due to a paper-end (only when the paper roll is not present). | — | BUSY |
| | 7. When an error has occurred. | — | BUSY |
| | 8. When head cleaning is performed. | — | BUSY |
| | 9. When an ink cartridge is removed, or while an ink cartridge is exchanged due to ink end detection (ink cartridge is empty). | — | BUSY |
| | 10. When the printer is waiting for printing or insertion of another slip to be printed while the printer is waiting for removal of a cut sheet | — | BUSY |
| | 11. After performing the power off sequence. | — | BUSY |
| | 12. When the receive buffer becomes full. (*1) | BUSY | BUSY |

**Table 2.1.1 Printer Interface Connector Status and Signals (Continued)**

| Pin No. | Signal name | Signal direction | Function |
|---|---|---|---|
| | | | 2) When XON/XOFF control is selected:<br>The signal indicates whether the printer is correctly connected and is ready to receive data. SPACE indicates that the printer is ready to receive data. The signal is always SPACE except in the following cases:<br>• During the period from when the power is turned on to when the printer is ready to receive data<br>• During the self-test |
| 25 | INIT | Input | Changing the setting for memory switch Msw 1-8 enables this signal to be used as a reset signal for the printer.<br>The printer is reset when the signal remains SPACE for 1 ms or more. |

NOTE: (*1) • Condition of "receive buffer full"
The printer status when the space in the receive buffer drops to 128 bytes (or less) or until the space in the receive buffer reaches 256 bytes.

• The printer ignores the data received when the remaining space in the receive buffer is 0 bytes.

2.1.1.4 XON/XOFF transmission timing

When XON/XOFF control is selected, the printer transmits XON or XOFF signals as follows. Transmission timing differs depending on the memory switch Msw 1-3 setting.

**Table 2.1.2 XON/XOFF Transmission Timing**

| | Printer status | Memory Switch Msw 1-3 | |
|---|---|---|---|
| | | ON | OFF |
| XON transmission | ① When the printer goes online after turning on the power or resetting | Transmit | Transmit |
| | ② When the receive buffer is released from the buffer full state | Transmit | Transmit |
| | ③ When the printer switches from offline to online | — | Transmit |
| | ④ When the printer recovers from an error using the commands | — | Transmit |
| XOFF transmission | ⑤ When the receive buffer becomes full | Transmit | Transmit |
| | ⑥ When the printer switches from online to offline | — | Transmit |

NOTES:
- The XON code is <11>H and the XOFF code is <13>H.
- In case ③, XON is not transmitted when the receive buffer is full.
- In case ⑥, XOFF is not transmitted when the receive buffer is full.
- When memory switch Msw 1-3 is set to OFF, XON is not transmitted if the printer is in the offline state in case ②.

2.1.1.5 Notes on setting memory switch Msw 1-3 to ON

1) The printer mechanism stops but does not become busy when: an error has occurred, the cover is open, printing stops due to a paper-end, or paper is fed using the paper FEED button.
2) When setting memory switch Msw 1-3 to ON to enable handshaking with the printer, be sure to check the printer status using the **GS a** and **GS j** commands and the ASB function. In this setting, the default value of *n* for the **GS a** command is 2, and for the **GS j** command is 1. The printer automatically transmits the printer status, depending on online/offline changes.
3) When using **DLE EOT**, **DLE ENQ**, and **DLE DC4**, be sure that the receive buffer does not become full.
   - When using a host that cannot transmit data when the printer is busy:

     If an error has occurred, **DLE EOT**, **DLE ENQ**, and **DLE DC4** cannot be used when the printer is busy due to a receive buffer-full state.
   - When using a host that can transmit data when the printer is busy:

     When the receive buffer becomes full during transmission of bit-image data, if **DLE ENQ**, **DLE EOT**, or **DLE DC4** is used the command is also processed as bit-image data. Data transmitted when the receive buffer is full may be lost.

     Hint: Check the printer status using **GS I** or **GS r** after transmitting each line of data. Transmit one line of data at a time so that the receive buffer does not become full.

2.1.1.6 Notes on Resetting the Printer Using the Interface

The printer can be reset using interface pins 6 and 25 by changing the memory switch setting (refer to Table 3.3.7, Memory Switch Msw 1).

**Table 2.1.3 Reset Switching**

| Signal line | Memory switch | Reset condition |
|---|---|---|
| Pin 6 (DSR) | Msw 1-7: ON | MARK level input |
| Pin 25 (INIT) | Msw 1-8: ON | SPACE or TTL-HIGH level input |

To reset the printer, the following requirements must be satisfied.

- DC characteristics:

**Table 2.1.4 Reset DC Characteristics**

| | | Pin 6 (DSR) | Pin 25 (INIT) |
|---|---|---|---|
| Input HIGH voltage | $V_{IH}$ | -15 to -3 V | +2 to +15 V |
| Input LOW voltage | $V_{IL}$ | +3 to +15 V | -15 to + 0.8 V |
| Input HIGH current: | $I_{IH}$ | -5.3 mA (maximum) | 1 mA (maximum) |
| Input LOW current: | $I_{IL}$ | -5 mA (maximum) | -2 mA (maximum) |
| Input impedance: | $R_{IN}$ | 3 kΩ (minimum) | |

- AC characteristics:
  Minimum reset pulse width: TRS 1 ms (minimum)

  - When using pin 6 (DSR) (Msw 1-7 is ON):

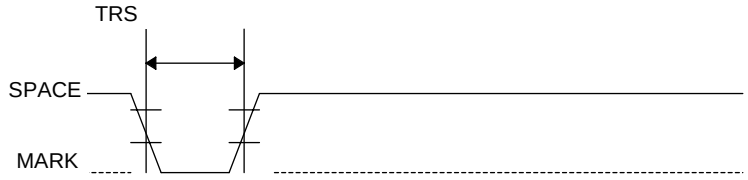


**Figure 2.1.1 Minimum Reset Pulse Width (Pin 6)**

  - When using pin 25 (INIT) (Msw 1-8 is ON):

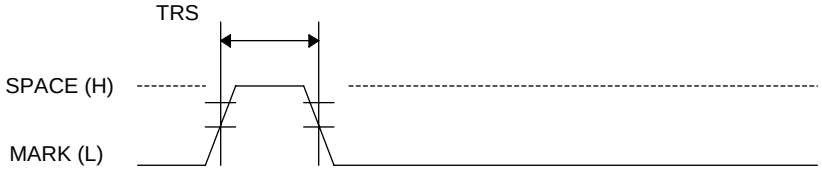


**Figure 2.1.2 Minimum Reset Pulse Width (Pin 25)**

NOTES:
- When a signal is input that does not satisfy the requirements above, printer operation is not guaranteed. When a signal is input to pin 25 (INIT) at the TTL level, the requirements above must also be satisfied. Although a signal is input to pin 6 (DSR) at the TTL level, according to the DC characteristics described above, the operation is not guaranteed and pin 6 cannot be controlled.
- When pin 6 (DSR) and pin 25 (INIT) are open, the printer is operating.

### 2.1.2 IEEE 1284 Bidirectional Parallel Interface (Parallel Interface Specifications)

Copyright © 1994 by the Institute of Electrical and Electronic Engineers, Inc.

2.1.2.1 Compatibility Mode

1) Compatibility Mode is Data Transmission from Host to Printer only: Centronics compatible.

2) Specifications

| | |
|---|---|
| Data transmission: | 8-bit parallel |
| Synchronization: | Externally supplied nStrobe signals* |
| Handshaking: | nAck and Busy signals* |
| Signal levels: | TTL compatible |
| Connector: | ADS-B36BLFDR176 (HONDA) or equivalent (IEEE 1284 Type B) |

* n before the signal name indicates active LOW.

3) Switching between online and offline

The printer is not equipped with any online/offline switch. The printer is placed into offline status in any of the following cases:

1) Between when the power is turned on or the printer is reset and when the printer mechanism is finished initializing.
2) During the self-test.
3) When the paper roll cover is open.
4) When the carriage cover is open.
5) During paper feeding using the paper FEED button.
6) When the printer stops printing due to a paper-end (in cases when an empty paper supply is detected by either the paper roll end detector or the paper roll near-end detector with a printing halt feature set by **ESC c 4**).
7) When an error has occurred.
8) When head cleaning is performed.
9) When no ink cartridge is installed.
10) Between when an ink cartridge is exchanged due to the ink end detection and when the ink end is canceled.
11) When the printer is waiting for insertion of another slip to be printed while waiting for removal of a cut sheet.
12) After performing the power off sequence (**DLE DC4** (*fn* = 2)).

2.1.2.2 Reverse mode (data transmission from printer to host)

The status data transmission from the printer to the host proceeds in the Nibble or Byte mode.

- Description

  This mode allows data transmission from the asynchronous printer under the control of the host.

  Data transmissions in the Nibble Mode are made via the existing control lines in units of four bits (a Nibble). In the Byte Mode, data transmissions proceed by making the eight-bit data lines bidirectional.

  Both modes fail to proceed concurrently with the Compatibility Mode, thereby causing half-duplex transmission.

2.1.2.3 Interface connector pin assignments for each mode

**Table 2.1.5 Interface Connector Pin Assignments for Each Mode**

| Pin | Source | Compatibility mode | Nibble mode | Byte mode |
|---|---|---|---|---|
| 1 | Host | nStrobe | HostClk | HostClk |
| 2 | Host/Ptr | Data0 (LSB) | Data0 (LSB) | Data0 (LSB) |
| 3 | Host/Ptr | Data1 | Data1 | Data1 |
| 4 | Host/Ptr | Data2 | Data2 | Data2 |
| 5 | Host/Ptr | Data3 | Data3 | Data3 |
| 6 | Host/Ptr | Data4 | Data4 | Data4 |
| 7 | Host/Ptr | Data5 | Data5 | Data5 |
| 8 | Host/Ptr | Data6 | Data6 | Data6 |
| 9 | Host/Ptr | Data7 (MSB) | Data7 (MSB) | Data7 (MSB) |
| 10 | Printer | nAck | PtrClk | PtrClk |
| 11 | Printer | Busy | PtrBusy/Data3, 7 | PtrBusy |
| 12 | Printer | Perror | AckDataReq/Data2, 6 | AckDataReq |
| 13 | Printer | Select | Xflag/Data1, 5 | Xflag |
| 14 | Host | nAutoFd | HostBusy | HostBusy |
| 15 | | NC | ND | ND |
| 16 | | GND | GND | GND |
| 17 | | FG | FG | FG |
| 18 | Printer | Logic-H | Logic-H | Logic-H |
| 19 | | GND | GND | GND |
| 20 | | GND | GND | GND |
| 21 | | GND | GND | GND |
| 22 | | GND | GND | GND |
| 23 | | GND | GND | GND |
| 24 | | GND | GND | GND |
| 25 | | GND | GND | GND |
| 26 | | GND | GND | GND |
| 27 | | GND | GND | GND |
| 28 | | GND | GND | GND |
| 29 | | GND | GND | GND |
| 30 | | GND | GND | GND |
| 31 | Host | nInit | nInit | nInit |
| 32 | Printer | nFault | nDataAvail/Data0, 4 | nDataAvail |
| 33 | | GND | ND | ND |
| 34 | Printer | DK_STATUS | ND | ND |
| 35 | Printer | +5V | ND | ND |
| 36 | Host | nSelectIn | 1284-Active | 1284-Active |

NC: Not connected
ND: Not defined

NOTES: 1. A prefix "n" to signal names refers to "L" active signals. If the host is not equipped with all of the signal lines listed above, two-way communication is not possible.
2. For interfacing, signal lines shall use twisted pair cables with the return sides connected to signal ground level.
3. Interfacing conditions shall all be based on the TTL level to meet the characteristics described below. In addition, both rise time and fall time of each signal shall be 0.5 μs or less.
4. Data transmission shall not ignore the signals nAck or Busy. An attempt to transmit data with either signal, nAck or Busy, ignored can cause lost data. (Data transmissions to the printer shall be made after verifying the nAck signal or while the Busy signal is at the "L" level.)
5. Interface cables shall be below the maximum length and as short as possible.

2.1.2.4 Electrical characteristics

**Table 2.1.6 DC Characteristics (Except Logic-H, +5 V signals)**

| Characteristics | Symbol | Specifications | | Conditions |
|---|---|---|---|---|
| | | Min | Max | |
| Output HIGH voltage | $V_{OH}$ | *2.4 V | 5.5 V | *$I_{OH}$=0.32 mA |
| Output LOW voltage | $V_{OL}$ | -0.5 V | *0.4 V | *$I_{OL}$=-12 mA |
| Output HIGH current | $I_{OH}$ | 0.32 mA | - | $V_{OH}$=2.4 V |
| Output LOW current | $I_{OL}$ | -12 mA | - | $V_{OL}$=0.4 V |
| Input HIGH voltage | $V_{IH}$ | 2.0 V | - | |
| Input LOW voltage | $V_{IL}$ | - | 0.8 V | |
| Input HIGH current | $I_{IH}$ | - | -0.32 mA | $V_{IH}$=2.0 V |
| Input LOW current | $I_{IL}$ | - | 12 mA | $V_{IL}$=0.8 V |

**Table 2.1.7 Logic-H Signal Sender Characteristics**

| Characteristics | Symbol | Specifications | | Conditions |
|---|---|---|---|---|
| | | Min | Max | |
| Output HIGH voltage | $V_{OH}$ | 0 V | 5 V | |
| Output LOW voltage | $V_{OL}$ | - | 2.0 V | While the power is OFF |

**Table 2.1.8 +5 V Signal Sender Characteristics**

| Characteristics | Symbol | Specifications | | Conditions |
|---|---|---|---|---|
| | | Min | Max | |
| Output HIGH voltage | $V_{OH}$ | *2.4 V | 5.5 V | *$I_{OH}$=0.32 mA |
| Output LOW voltage | $V_{OL}$ | - | - ** | While the power is OFF |
| Output HIGH current | $I_{OH}$ | - | 0.32 mA | $V_{OH}$=2.4 V |
| Output LOW current | $I_{OL}$ | - ** | - | While the power is OFF |

** No guarantee is offered to $V_{OL}$ and $I_{OL}$ while the power is OFF.

2.1.2.5 Data receiving timing (compatibility mode)

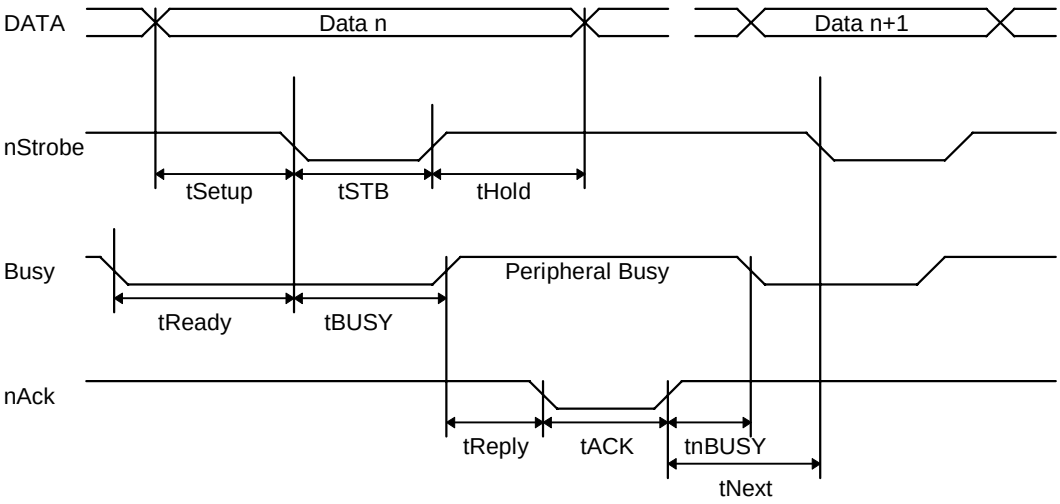


**Figure 2.1.3 Data Receiving Timing**

**Table 2.1.9 Data Receiving Timing**

| Characteristics | Symbol | Specifications | |
|---|---|---|---|
| | | Minimum [ns] | Maximum [ns] |
| Data Hold Time (host) | tHold | 750 | -- |
| Data Setup Time | tSetup | 750 | -- |
| STROBE Pulse Width | tSTB | 750 | -- |
| READY Cycle Idle Time | tReady | 0 | -- |
| BUSY Output Delay Time | tBUSY | 0 | 500 |
| Data Processing Time | tReply | 0 | ∞ |
| ACKNLG Pulse Width | tACK | 500 | 10µs |
| BUSY Release Time | tnBUSY | 0 | ∞ |
| ACK Cycle Idle Time | tNext | 0 | -- |

*The printer latches data at the nStrobe rising edge.

2.1.2.6 Notes on resetting the printer through the interface

When the printer is reset through the interface nInit signal (pin # 31) in compatibility mode, satisfy the following characteristics; however, note that the reset signal is ignored in Reverse Mode (pin # 36 nSelectIn (1284-Active: ”H”)).

| | |
|---|---|
| DC Characteristics | TTL level |
| AC Characteristics | Minimum reset pulse width TR: 50 µs (minimum) |

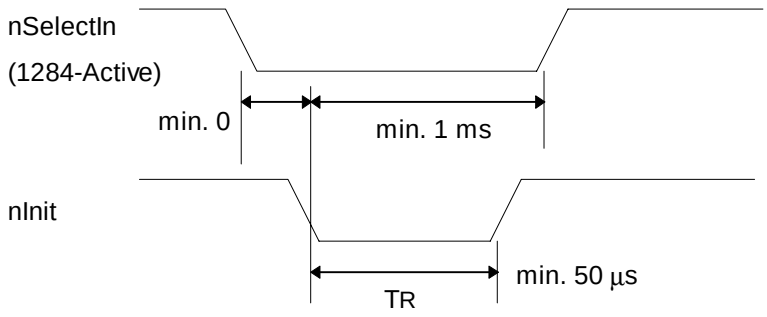


**Figure 2.1.4**

2.1.2.7 Reception of status from the printer through the bidirectional parallel interface

In the bidirectional parallel interface specifications, the printer status transmission is available by using the two-way communication facility in the Nibble/Byte Modes in accordance with IEEE 1284.

In this case, as opposed to the RS-232 serial interface specifications, the real-time interruptions from the printer to the host are disabled and thus precautions must be taken for the following:

1) The allowable capacity of the printer internal buffer is 99 bytes (except ASB status). The status signals exceeding this capacity will be discarded. To prevent possible loss of status, the host shall be ready to accept data (Reverse Mode).
2) When ASB is used, the host is preferably in the wait state for accepting data (Reverse Idle Mode). When this state is not available, the host shall enter the Reverse Mode to constantly monitor the presence of data.
3) When ASB is used in the Reverse Mode, preference shall be given to the ASB status for transmission over the other status signals. Any accumulated ASB status signals left for transmission from the last to the newest ASB status transmission shall be transmitted together at one time as one ASB status, showing the presence of change, followed by the latest ASB status.

Example: In the normal (wait) state, the ASB status is configured as follows.

| First Status | Second Status | Third Status | Fourth Status |
|---|---|---|---|
| 0001 0000 | 0000 0000 | 0000 0000 | 0110 1111 |

After this sequence of operations, if, for example, the near end is detected, the printer cover is opened, and the printer cover is closed, the following pieces of data are accumulated.

| | First Status | Second Status | Third Status | Fourth Status | |
|---|---|---|---|---|---|
| ① | 0001 0000 | 0000 0000 | 0000 0011 | 0110 1111 | Near end detection |
| ② | 0011 1000 | 0000 0000 | 0000 0011 | 0110 1111 | The printer cover is opened. |
| ③ | 0001 0000 | 0000 0000 | 0000 0011 | 0110 1111 | The printer cover is closed. |

When the ASB status is received following this, a total of eight bytes of ASB will be transmitted as follows.

| | First Status | Second Status | Third Status | Fourth Status |
|---|---|---|---|---|
| Accumulated ASB (①+②+③) | 0011 1000 | 0000 0000 | 0000 0011 | 0110 1111 |
| + | | | | |
| | First Status | Second Status | Third Status | Fourth Status |
| The latest ASB (③) | 0001 0000 | 0000 0000 | 0000 0011 | 0110 1111 |

2.1.2.8 Notes on setting memory switch Msw 1-3 to ON

1) The printer mechanism stops but does not become BUSY in the following cases:
   - When an error occurs.
   - When the cover is open.
   - When the printer stops printing due to a paper end.
   - When paper is fed using the paper FEED button.

2) When handshaking with the printer while using this switch setting, make sure to monitor the printer with the **GS a**, and **GS j** commands and the ASB function.
   With this switch setting, the default value of *n*, for the **GS a** command is 2, and for the **GS j** command is 1. This automatically transmits the printer status, depending on online/offline changes.

3) When using **DLE EOT**, **DLE ENQ**, or **DLE DC4** make sure that the receive buffer does not become full.
   If an error occurs when the receive buffer is full and the printer is BUSY, **DLE EOT**, **DLE ENQ**, or **DLE DC4** cannot be used.

### 2.1.3 Other Interfaces

Various interface boards (EPSON UB series) can be used (except UB-P02).

## 2.2 Connectors

### 2.2.1 Interface Connectors

Refer to Section 2.1, Interfaces.

### 2.2.2 Power Supply Connector

This connector is used to connect the printer to an external power source.

1) Pin assignments: Refer to Table 2.2.1.

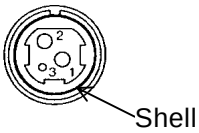


**Figure 2.2.1 Power Supply Connector**

**Table 2.2.1 Power Supply Connector Pin Assignments**

| Pin number | Signal name |
|---|---|
| 1 | +24 VDC |
| 2 | GND |
| 3 | NC |
| Shell | Frame GND |

NC: Not Connected

2) Connector model: Printer side: Hosiden TCS7960-532010 or equivalent
User side: Hosiden TCP8927-631100 or equivalent
TCP8927-531100 or equivalent

### 2.2.3 Drawer Kick-out Connector (Modular Connector)

The pulse specified by **ESC p** or **DLE DC4** (*fn* = 1) is output to this connector. The host can confirm the status of the input signal by using the **DLE EOT**, **GS r**, or **GS a** (ASB status) commands.

1) Pin assignments: Refer to Table 2.2.2
2) Connector model: Printer side: MOLEX 52065-6615 or equivalent
   User side: 6-position, 6-contact (RJ12 telephone jack)

**Table 2.2.2 Drawer Kick-out Connector Pin Assignments**

| Pin number | Signal name | Direction |
|---|---|---|
| 1 | Frame GND | — |
| 2 | Drawer kick-out drive signal 1 | Output |
| 3 | Drawer open/close signal | Input |
| 4 | +24 V | — |
| 5 | Drawer kick-out drive signal 2 | Output |
| 6 | Signal GND | — |

Pin 4 must be used only for the drawer.

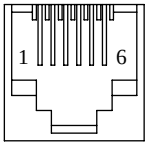


**Figure 2.2.2 Drawer Kick-out Connector**

3) Drawer kick-out drive signal

Output signal: Output voltage: Approximately 24 V
Output current: 1 A or less

**CAUTION:** To avoid an overcurrent, the resistance of the drawer kick-out solenoid must be 24 Ω or more.

Output waveform: Outputs the waveforms in Figure 2.2.3 to points A and B in Figure 2.2.4.

ON time and OFF time are specified by **ESC p** or **DLE DC4**.

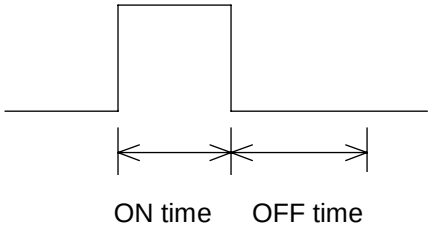


**Figure 2.2.3 Drawer Kick-out Drive Signal Output Waveform**

4) Drawer open/close signal

Input signal level (connector pin 3): "L" = 0 to 0.8 V
"H" = 2 to 5 V

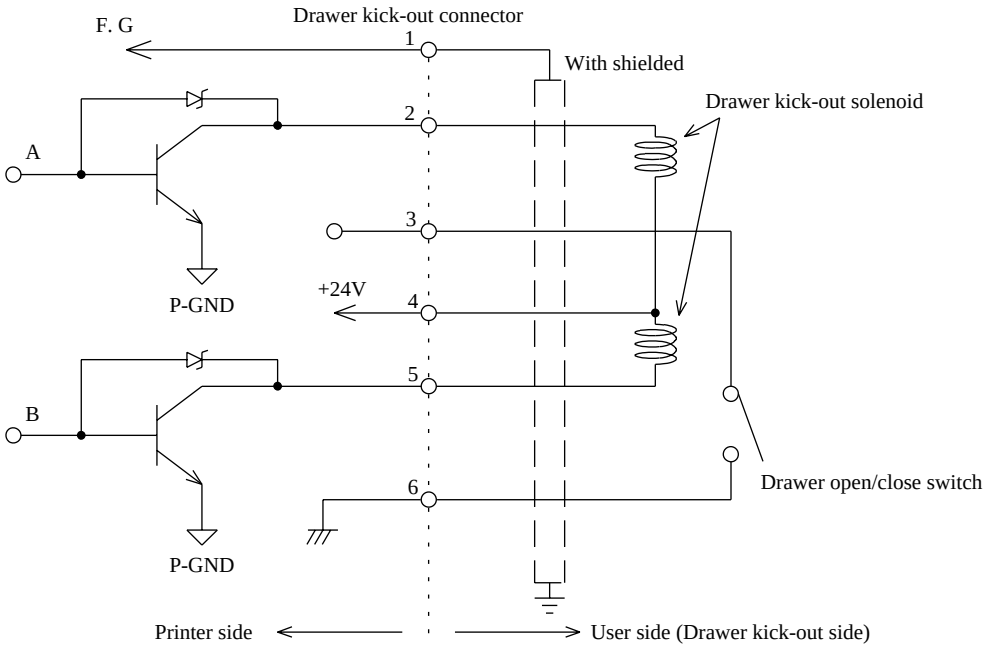


**Figure 2.2.4 Drawer Circuitry**

NOTES:
1. Use a shielded cable as the drawer connector cable.
2. Two driver transistors cannot be energized simultaneously.
3. The drawer drive duty must be as shown below.

$$\frac{\text{ON time}}{(\text{ON time + OFF time})} \leq 0.2$$

4. Be sure to use the printer power supply (connector pin 4) for the drawer power source.
5. The resistance of the drawer kick-out solenoid must not be less than specified. Otherwise, an overcurrent could damage the solenoid.
6. Do not connect a telecommunication network to the drawer kick-out connector.

### 2.2.4 Customer Display Connector

(Available only for the serial interface model)

1) Model:

Receptacle: MOLEX 52065-8845 or equivalent

2) Pin assignments:

**Table 2.2.3 Customer Display Connector Pin Assignments**

| Pin number | Signal name | Direction |
|---|---|---|
| 1 | FG | — |
| 2 | NC | — |
| 3 | TXD | Output |
| 4 | DTR | Output |
| 5 | DSR | Input |
| 6 | SG | — |
| 7 | +24 | — |
| 8 | PG | — |

NC: Not connected

+24 V is always output through pin 7. The driving capability is 350 mA or less. Be sure not to use customer displays other than the Seiko Epson DM-D series.

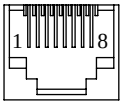


**Figure 2.2.5 DM-D Connector**

# 3. FUNCTIONS

## 3.1 List of Commands

| Command | Name |
|---|---|
| **HT** | Horizontal tab |
| **LF** | Print and line feed |
| **FF** | 1) Print and eject cut sheet |
| | 2) Print data in page mode and change to standard mode |
| **CR** | Print and carriage return |
| **CAN** | Cancel print data in page mode |
| **DLE EOT** | Transmit real-time status |
| **DLE ENQ** | Send real-time request to printer |
| **DLE DC4** | 1) Generate pulse in real-time (*fn* = 1) |
| | 2) Execute power off (*fn* = 2) |
| | 3) Transmit specified status in real-time (*fn* = 7) |
| | 4) Clear buffer(s) (*fn* = 8) |
| **ESC FF** | Print data in page mode |
| **ESC SP** | Set right-side character spacing |
| **ESC !** | Select print mode(s) |
| **ESC $** | Set absolute print position |
| **ESC %** | Select/cancel user-defined character set |
| **ESC &** | Define user-defined characters |
| **ESC ∗** | Select bit-image mode |
| **ESC –** | Turn underline mode on/off |
| **ESC 2** | Select default line spacing |
| **ESC 3** | Set line spacing |
| **ESC <** | Return home |
| **ESC =** | Select peripheral device |
| **ESC ?** | Cancel user-defined characters |
| **ESC @** | Initialize printer |
| **ESC D** | Set horizontal tab positions |
| **ESC E** | Turn emphasized mode on/off |
| **ESC F** | Set/cancel cut sheet reverse eject |
| **ESC G** | Turn double-strike mode on/off |
| **ESC J** | Print and feed paper |
| **ESC K** | Print and reverse feed |
| **ESC L** | Select page mode |

| Command | Name |
|---|---|
| **ESC M** | Select character font |
| **ESC R** | Select an international character set |
| **ESC S** | Select standard mode |
| **ESC T** | Select print direction in page mode |
| **ESC U** | Turn unidirectional printing mode on/off |
| **ESC W** | Set printing area in page mode |
| **ESC ** | Set relative print position |
| **ESC a** | Select justification |
| **ESC c 0** | Select paper type(s) for printing |
| **ESC c 1** | Select paper type(s) for command settings |
| **ESC c 3** | Select paper sensor(s) to output paper-end signals |
| **ESC c 4** | Select paper sensor(s) to stop printing |
| **ESC c 5** | Enable/disable panel buttons |
| **ESC d** | Print and feed *n* lines |
| **ESC e** | Print and reverse feed *n* lines |
| **ESC f** | Set cut sheet wait time |
| **ESC p** | Generate pulse |
| **ESC q** | Release paper |
| **ESC t** | Select character code table |
| **ESC {** | Turn upside-down printing mode on/off |
| **GS !** | Select character size |
| **GS $** | Set absolute vertical print position in page mode |
| **GS ( A** | Execute test print |
| **GS ( B** | Customize ASB status bits |
| **GS ( C** | Edit NV user memory |
| **GS ( D** | Enable/disable real-time commands |
| **GS ( E** | User setup commands |
| **GS ( G** | Select cut sheet control function(s) |
| **GS ( H** | Request response transmission |
| **GS ( K** | Select print control method(s) |
| **GS ( L** | Set graphics data |
| **GS 8 L** | |
| **GS ( M** | Customize printer control value(s) |
| **GS ( N** | Select character style(s) |

| Command | Name |
|---|---|
| **GS ( P** | Select page mode control function(s) |
| **GS ( k** | Set up and print symbol |
| **GS B** | Turn white/black reverse printing mode on/off |
| **GS H** | Select printing position of HRI characters |
| **GS I** | Transmit printer ID |
| **GS L** | Set left margin |
| **GS P** | Set horizontal and vertical motion units |
| **GS T** | Set print position to the beginning of print line |
| **GS V** | Select cut mode and cut paper |
| **GS W** | Set printing area width |
| **GS ** | Set relative vertical print position in page mode |
| **GS a** | Enable/disable Automatic Status Back (ASB) |
| **GS f** | Select font for HRI characters |
| **GS g 0** | Initialize maintenance counter |
| **GS g 2** | Transmit maintenance counter |
| **GS h** | Set bar code height |
| **GS j** | Enable/disable Automatic Status Back (ASB) for ink |
| **GS k** | Print bar code |
| **GS r** | Transmit status |
| **GS w** | Set bar code width |

The commands listed below in the first column are defined as “obsolete commands” in the ESC/POS® command system. This printer supports both upward-compatible commands and obsolete commands. However, the upward-compatible commands are recommended for use.

| Obsolete command | | Upward-compatible command |
|---|---|---|
| **GS ∗**: | Define downloaded bit image | **GS ( L** <Function 83> or <Function 84> |
| **GS /**: | Print downloaded bit image | **GS ( L** <Function 85> |
| **GS Q 0**: | Print variable vertical size bit image | **GS ( L** <Function 113> + <Function 50> |
| **GS v 0**: | Print raster bit image | **GS ( L** <Function 112> and <Function 50> |

NOTE: “Obsolete commands” are commands that are supported by legacy models; however it is recommended to replace them with upward-compatible commands, because they will not be supported in the future products.

### 3.2 Character Code Tables

#### 3.2.1 Page 0 (PC437: USA, Standard Europe) (International Character Set: U.S.A.)

| | 0 | 1 | 2 | 3 | 4 | 5 | 6 | 7 | 8 | 9 | A | B | C | D | E | F |
|---|---|---|---|---|---|---|---|---|---|---|---|---|---|---|---|---|
| HEX | 0000 | 0001 | 0010 | 0011 | 0100 | 0101 | 0110 | 0111 | 1000 | 1001 | 1010 | 1011 | 1100 | 1101 | 1110 | 1111 |
| HEX BIN | | | | | | | | | | | | | | | | |
| 0 0000 | NUL 00 | DLE 16 | SP 32 | 0 48 | @ 84 | P 80 | ` 96 | p 112 | Ç 128 | É 144 | á 160 | ▒ 176 | └ 192 | ╨ 208 | α 224 | ≡ 240 |
| 1 0001 | 01 | XON 17 | ! 33 | 1 49 | A 65 | Q 81 | a 97 | q 113 | ü 129 | æ 145 | í 161 | ▒ 177 | ┴ 193 | ╤ 209 | ß 225 | ± 241 |
| 2 0010 | 02 | 18 | " 34 | 2 50 | B 66 | R 82 | b 98 | r 114 | é 130 | Æ 146 | ó 162 | ▓ 178 | ┬ 194 | ╥ 210 | Γ 226 | ≥ 242 |
| 3 0011 | 03 | XOFF 19 | # 35 | 3 51 | C 67 | S 83 | c 99 | s 115 | â 131 | ô 147 | ú 163 | │ 179 | ├ 195 | ╙ 211 | π 227 | ≤ 243 |
| 4 0100 | EOT 04 | 20 | $ 36 | 4 52 | D 68 | T 84 | d 100 | t 116 | ä 132 | ö 148 | ñ 164 | ┤ 180 | ─ 196 | ╘ 212 | Σ 228 | ⌠ 244 |
| 5 0101 | ENQ 05 | 21 | % 37 | 5 53 | E 69 | U 85 | e 101 | u 117 | à 133 | ò 149 | Ñ 165 | ╡ 181 | ┼ 197 | ╒ 213 | σ 229 | ⌡ 245 |
| 6 0110 | 06 | 22 | & 38 | 6 54 | F 70 | V 86 | f 102 | v 118 | å 134 | û 150 | ª 166 | ╢ 182 | ╞ 198 | ╓ 214 | µ 230 | ÷ 246 |
| 7 0111 | 07 | 23 | ' 39 | 7 55 | G 71 | W 87 | g 103 | w 119 | ç 135 | ù 151 | º 167 | ╖ 183 | ╟ 199 | ╫ 215 | τ 231 | ≈ 247 |
| 8 1000 | BS 08 | 24 | ( 40 | 8 56 | H 72 | X 88 | h 104 | x 120 | ê 136 | ÿ 152 | ¿ 168 | ╕ 184 | ╚ 200 | ╪ 216 | Φ 232 | ° 248 |
| 9 1001 | 09 | 25 | ) 41 | 9 57 | I 73 | Y 89 | i 105 | y 121 | ë 137 | Ö 153 | ⌐ 169 | ╣ 185 | ╔ 201 | ┘ 217 | Θ 233 | ∙ 249 |
| A 1010 | LF 10 | 26 | * 42 | : 58 | J 74 | Z 90 | j 106 | z 122 | è 138 | Ü 154 | ¬ 170 | ║ 186 | ╩ 202 | ┌ 218 | Ω 234 | · 250 |
| B 1011 | ESC 27 | 43 | + 43 | ; 59 | K 75 | [ 91 | k 107 | { 123 | ï 139 | ¢ 155 | ½ 171 | ╗ 187 | ╦ 203 | █ 219 | δ 235 | √ 251 |
| C 1100 | FS 28 | 44 | , 44 | < 60 | L 76 | \ 92 | l 108 | \| 124 | î 140 | £ 156 | ¼ 172 | ╝ 188 | ╠ 204 | ▄ 220 | ∞ 236 | ⁿ 252 |
| D 1101 | GS 29 | 45 | - 45 | = 61 | M 77 | ] 93 | m 109 | } 125 | ì 141 | ¥ 157 | ¡ 173 | ╜ 189 | ═ 205 | ▌ 221 | φ 237 | ² 253 |
| E 1110 | 30 | 46 | . 46 | > 62 | N 78 | ^ 94 | n 110 | ~ 126 | Ä 142 | ₧ 158 | « 174 | ╛ 190 | ╬ 206 | ▐ 222 | ε 238 | ■ 254 |
| F 1111 | 31 | 47 | / 47 | ? 63 | O 79 | _ 95 | o 111 | SP 127 | Å 143 | ƒ 159 | » 175 | ┐ 191 | ╧ 207 | ▀ 223 | ∩ 239 | SP 255 |

| EPSON | TITLE<br>**TM-J7500/J7600**<br>Specification<br>(STANDARD) | SHEET REVISION<br>A | NO. | |
|---|---|---|---|---|
| | | | NEXT<br>37 | SHEET<br>36 |

### 3.2.2 Page 1 (Katakana)

| | HEX | 8 | 9 | A | B | C | D | E | F |
|---|---|---|---|---|---|---|---|---|---|
| HEX | BIN | 1000 | 1001 | 1010 | 1011 | 1100 | 1101 | 1110 | 1111 |
| 0 | 0000 | ━ 128 | ┴ 144 | SP 160 | ー 176 | タ 192 | ミ 208 | ニ 224 | × 240 |
| 1 | 0001 | ━ 129 | ┬ 145 | 。 161 | ア 177 | チ 193 | ム 209 | ヒ 225 | 円 241 |
| 2 | 0010 | ━ 130 | ┤ 146 | 「 162 | イ 178 | ツ 194 | メ 210 | ヒ 226 | 年 242 |
| 3 | 0011 | ━ 131 | ├ 147 | 」 163 | ウ 179 | テ 195 | モ 211 | ヨ 227 | 月 243 |
| 4 | 0100 | ■ 132 | ═ 148 | 、 164 | エ 180 | ト 196 | ヤ 212 | ◢ 228 | 日 244 |
| 5 | 0101 | ■ 133 | ─ 149 | ・ 165 | オ 181 | ナ 197 | ユ 213 | ◣ 229 | 時 245 |
| 6 | 0110 | ■ 134 | │ 150 | ヲ 166 | カ 182 | ニ 198 | ヨ 214 | ◥ 230 | 分 246 |
| 7 | 0111 | ■ 135 | │ 151 | ァ 167 | キ 183 | ヌ 199 | ラ 215 | ◤ 231 | 秒 247 |
| 8 | 1000 | │ 136 | ┌ 152 | ィ 168 | ク 184 | ネ 200 | リ 216 | ♠ 232 | 〒 248 |
| 9 | 1001 | ▌ 137 | ┐ 153 | ゥ 169 | ケ 185 | ノ 201 | ル 217 | ♥ 233 | 市 249 |
| A | 1010 | ▌ 138 | └ 154 | ェ 170 | コ 186 | ハ 202 | レ 218 | ✦ 234 | 区 250 |
| B | 1011 | ▌ 139 | ┘ 155 | ォ 171 | サ 187 | ヒ 203 | ロ 219 | ♣ 235 | 町 251 |
| C | 1100 | ▌ 140 | ╭ 156 | ャ 172 | シ 188 | フ 204 | ワ 220 | ● 236 | 村 252 |
| D | 1101 | ▌ 141 | ╮ 157 | ュ 173 | ス 189 | ヘ 205 | ン 221 | ○ 237 | 人 253 |
| E | 1110 | ▌ 142 | ╯ 158 | ョ 174 | セ 190 | ホ 206 | ゛ 222 | ／ 238 | ▒ 254 |
| F | 1111 | ┼ 143 | ╰ 159 | ッ 175 | ソ 191 | マ 207 | ゜ 223 | ＼ 239 | SP 255 |

### 3.2.3 Page 2 (PC850: Multilingual)

| | HEX | 8 | 9 | A | B | C | D | E | F |
|---|---|---|---|---|---|---|---|---|---|
| HEX | BIN | 1000 | 1001 | 1010 | 1011 | 1100 | 1101 | 1110 | 1111 |
| 0 | 0000 | Ç 128 | É 144 | á 160 | ░ 176 | └ 192 | ð 208 | Ó 224 | — 240 |
| 1 | 0001 | ü 129 | æ 145 | í 161 | ▒ 177 | ┴ 193 | Ð 209 | ß 225 | ± 241 |
| 2 | 0010 | é 130 | Æ 146 | ó 162 | ▓ 178 | ┬ 194 | Ê 210 | Ô 226 | ‗ 242 |
| 3 | 0011 | â 131 | ô 147 | ú 163 | │ 179 | ├ 195 | Ë 211 | Ò 227 | ¾ 243 |
| 4 | 0100 | ä 132 | ö 148 | ñ 164 | ┤ 180 | ─ 196 | È 212 | õ 228 | ¶ 244 |
| 5 | 0101 | à 133 | ò 149 | Ñ 165 | Á 181 | ┼ 197 | ı 213 | Õ 229 | § 245 |
| 6 | 0110 | å 134 | û 150 | ª 166 | Â 182 | ã 198 | Í 214 | µ 230 | ÷ 246 |
| 7 | 0111 | ç 135 | ù 151 | º 167 | À 183 | Ã 199 | Î 215 | þ 231 | ¸ 247 |
| 8 | 1000 | ê 136 | ÿ 152 | ¿ 168 | © 184 | ╚ 200 | Ï 216 | Þ 232 | ° 248 |
| 9 | 1001 | ë 137 | Ö 153 | ® 169 | ╣ 185 | ╔ 201 | ┘ 217 | Ú 233 | ¨ 249 |
| A | 1010 | è 138 | Ü 154 | ¬ 170 | ║ 186 | ╩ 202 | ┌ 218 | Û 234 | · 250 |
| B | 1011 | ï 139 | ø 155 | ½ 171 | ╗ 187 | ╦ 203 | █ 219 | Ù 235 | ¹ 251 |
| C | 1100 | î 140 | £ 156 | ¼ 172 | ╝ 188 | ╠ 204 | ▄ 220 | ý 236 | ³ 252 |
| D | 1101 | ì 141 | Ø 157 | ¡ 173 | ¢ 189 | ═ 205 | ¦ 221 | Ý 237 | ² 253 |
| E | 1110 | Ä 142 | × 158 | « 174 | ¥ 190 | ╬ 206 | Ì 222 | ¯ 238 | ■ 254 |
| F | 1111 | Å 143 | ƒ 159 | » 175 | ┐ 191 | ¤ 207 | ▀ 223 | ´ 239 | SP 255 |

### 3.2.4 Page 3 (PC860: Portuguese)

| | HEX | 8 | 9 | A | B | C | D | E | F |
|---|---|---|---|---|---|---|---|---|---|
| HEX | BIN | 1000 | 1001 | 1010 | 1011 | 1100 | 1101 | 1110 | 1111 |
| 0 | 0000 | Ç 128 | É 144 | á 160 | ░ 176 | └ 192 | ╨ 208 | α 224 | ≡ 240 |
| 1 | 0001 | ü 129 | À 145 | í 161 | ▒ 177 | ┴ 193 | ╤ 209 | β 225 | ± 241 |
| 2 | 0010 | é 130 | È 146 | ó 162 | ▓ 178 | ┬ 194 | ╥ 210 | Γ 226 | ≥ 242 |
| 3 | 0011 | â 131 | ô 147 | ú 163 | │ 179 | ├ 195 | ╙ 211 | π 227 | ≤ 243 |
| 4 | 0100 | ã 132 | õ 148 | ñ 164 | ┤ 180 | ─ 196 | ╘ 212 | Σ 228 | ⌠ 244 |
| 5 | 0101 | à 133 | ò 149 | Ñ 165 | ╡ 181 | ┼ 197 | ╒ 213 | σ 229 | ⌡ 245 |
| 6 | 0110 | Á 134 | Ú 150 | ª 166 | ╢ 182 | ╞ 198 | ╓ 214 | µ 230 | ÷ 246 |
| 7 | 0111 | ç 135 | ù 151 | º 167 | ╖ 183 | ╟ 199 | ╫ 215 | τ 231 | ≈ 247 |
| 8 | 1000 | ê 136 | Ì 152 | ¿ 168 | ╕ 184 | ╚ 200 | ╪ 216 | Φ 232 | ° 248 |
| 9 | 1001 | Ê 137 | Õ 153 | ⌐ 169 | ╣ 185 | ╔ 201 | ┘ 217 | Θ 233 | • 249 |
| A | 1010 | è 138 | Ü 154 | ¬ 170 | ║ 186 | ╩ 202 | ┌ 218 | Ω 234 | · 250 |
| B | 1011 | Í 139 | ¢ 155 | ½ 171 | ╗ 187 | ╦ 203 | █ 219 | δ 235 | √ 251 |
| C | 1100 | Ô 140 | £ 156 | ¼ 172 | ╝ 188 | ╠ 204 | ▄ 220 | ∞ 236 | ⁿ 252 |
| D | 1101 | ì 141 | Ù 157 | ¡ 173 | ╜ 189 | ═ 205 | ▌ 221 | ∅ 237 | ² 253 |
| E | 1110 | Ã 142 | ₧ 158 | « 174 | ╛ 190 | ╬ 206 | ▐ 222 | ∈ 238 | ■ 254 |
| F | 1111 | Â 143 | Ó 159 | » 175 | ┐ 191 | ╧ 207 | ▀ 223 | ∩ 239 | SP 255 |

### 3.2.5 Page 4 (PC863: Canadian-French)

| | HEX | 8 | 9 | A | B | C | D | E | F |
|---|---|---|---|---|---|---|---|---|---|
| HEX | BIN | 1000 | 1001 | 1010 | 1011 | 1100 | 1101 | 1110 | 1111 |
| 0 | 0000 | Ç 128 | É 144 | ¦ 160 | ░ 176 | └ 192 | ╨ 208 | α 224 | ≡ 240 |
| 1 | 0001 | ü 129 | È 145 | ´ 161 | ▒ 177 | ┴ 193 | ╤ 209 | β 225 | ± 241 |
| 2 | 0010 | é 130 | Ê 146 | ó 162 | ▓ 178 | ┬ 194 | ╥ 210 | Γ 226 | ≥ 242 |
| 3 | 0011 | â 131 | ô 147 | ú 163 | │ 179 | ├ 195 | ╙ 211 | π 227 | ≤ 243 |
| 4 | 0100 | Â 132 | Ë 148 | ¨ 164 | ┤ 180 | ─ 196 | ╘ 212 | Σ 228 | ⌠ 244 |
| 5 | 0101 | à 133 | Ï 149 | ¸ 165 | ╡ 181 | ┼ 197 | ╒ 213 | σ 229 | ⌡ 245 |
| 6 | 0110 | ¶ 134 | û 150 | ³ 166 | ╢ 182 | ╞ 198 | ╓ 214 | µ 230 | ÷ 246 |
| 7 | 0111 | ç 135 | ù 151 | ‾ 167 | ╖ 183 | ╟ 199 | ╫ 215 | τ 231 | ≈ 247 |
| 8 | 1000 | ê 136 | ¤ 152 | Î 168 | ╕ 184 | ╚ 200 | ╪ 216 | Φ 232 | ° 248 |
| 9 | 1001 | ë 137 | Ô 153 | ⌐ 169 | ╣ 185 | ╔ 201 | ┘ 217 | Θ 233 | • 249 |
| A | 1010 | è 138 | Ü 154 | ¬ 170 | ║ 186 | ╩ 202 | ┌ 218 | Ω 234 | · 250 |
| B | 1011 | ï 139 | ¢ 155 | ½ 171 | ╗ 187 | ╦ 203 | █ 219 | δ 235 | √ 251 |
| C | 1100 | î 140 | £ 156 | ¼ 172 | ╝ 188 | ╠ 204 | ▄ 220 | ∞ 236 | ⁿ 252 |
| D | 1101 | ═ 141 | Ù 157 | ¾ 173 | ╜ 189 | ═ 205 | ▌ 221 | ø 237 | ² 253 |
| E | 1110 | À 142 | Û 158 | « 174 | ╛ 190 | ╬ 206 | ▐ 222 | ∈ 238 | ■ 254 |
| F | 1111 | § 143 | ƒ 159 | » 175 | ┐ 191 | ╧ 207 | ▀ 223 | ∩ 239 | SP 255 |

### 3.2.6 Page 5 (PC865: Nordic)

| | HEX | 8 | 9 | A | B | C | D | E | F |
|---|---|---|---|---|---|---|---|---|---|
| HEX | BIN | 1000 | 1001 | 1010 | 1011 | 1100 | 1101 | 1110 | 1111 |
| 0 | 0000 | Ç 128 | É 144 | á 160 | ░ 176 | └ 192 | ╨ 208 | α 224 | ≡ 240 |
| 1 | 0001 | ü 129 | æ 145 | í 161 | ▒ 177 | ┴ 193 | ╤ 209 | ß 225 | ± 241 |
| 2 | 0010 | é 130 | Æ 146 | ó 162 | ▓ 178 | ┬ 194 | ╥ 210 | Γ 226 | ≥ 242 |
| 3 | 0011 | â 131 | ô 147 | ú 163 | │ 179 | ├ 195 | ╙ 211 | π 227 | ≤ 243 |
| 4 | 0100 | ä 132 | ö 148 | ñ 164 | ┤ 180 | ─ 196 | ╘ 212 | Σ 228 | ⌠ 244 |
| 5 | 0101 | à 133 | ò 149 | Ñ 165 | ╡ 181 | ┼ 197 | ╒ 213 | σ 229 | ⌡ 245 |
| 6 | 0110 | å 134 | û 150 | ª 166 | ╢ 182 | ╞ 198 | ╓ 214 | µ 230 | ÷ 246 |
| 7 | 0111 | ç 135 | ù 151 | º 167 | ╖ 183 | ╟ 199 | ╫ 215 | τ 231 | ≈ 247 |
| 8 | 1000 | ê 136 | ÿ 152 | ¿ 168 | ╕ 184 | ╚ 200 | ╪ 216 | Φ 232 | ° 248 |
| 9 | 1001 | ë 137 | Ö 153 | ⌐ 169 | ╣ 185 | ╔ 201 | ┘ 217 | Θ 233 | • 249 |
| A | 1010 | è 138 | Ü 154 | ¬ 170 | ║ 186 | ╩ 202 | ┌ 218 | Ω 234 | · 250 |
| B | 1011 | ï 139 | ø 155 | ½ 171 | ╗ 187 | ╦ 203 | █ 219 | δ 235 | √ 251 |
| C | 1100 | î 140 | £ 156 | ¼ 172 | ╝ 188 | ╠ 204 | ▄ 220 | ∞ 236 | n 252 |
| D | 1101 | ì 141 | Ø 157 | ¡ 173 | ╜ 189 | ═ 205 | ▌ 221 | ø 237 | ² 253 |
| E | 1110 | Ä 142 | Pt 158 | « 174 | ╛ 190 | ╬ 206 | ▐ 222 | ∈ 238 | ■ 254 |
| F | 1111 | Å 143 | ƒ 159 | ¤ 175 | ┐ 191 | ╧ 207 | ▀ 223 | ∩ 239 | SP 255 |

### 3.2.7 Page 16 (WPC1252)

| | HEX | 8 | 9 | A | B | C | D | E | F |
|---|---|---|---|---|---|---|---|---|---|
| HEX | BIN | 1000 | 1001 | 1010 | 1011 | 1100 | 1101 | 1110 | 1111 |
| 0 | 0000 | € 128 | SP 144 | SP 160 | ° 176 | À 192 | Ð 208 | à 224 | ð 240 |
| 1 | 0001 | SP 129 | ‘ 145 | ¡ 161 | ± 177 | Á 193 | Ñ 209 | á 225 | ñ 241 |
| 2 | 0010 | ‚ 130 | ’ 146 | ¢ 162 | ² 178 | Â 194 | Ò 210 | â 226 | ò 242 |
| 3 | 0011 | ƒ 131 | “ 147 | £ 163 | ³ 179 | Ã 195 | Ó 211 | ã 227 | ó 243 |
| 4 | 0100 | „ 132 | ” 148 | ¤ 164 | ´ 180 | Ä 196 | Ô 212 | ä 228 | ô 244 |
| 5 | 0101 | … 133 | • 149 | ¥ 165 | µ 181 | Å 197 | Õ 213 | å 229 | õ 245 |
| 6 | 0110 | † 134 | – 150 | ¦ 166 | ¶ 182 | Æ 198 | Ö 214 | æ 230 | ö 246 |
| 7 | 0111 | ‡ 135 | — 151 | § 167 | · 183 | Ç 199 | × 215 | ç 231 | ÷ 247 |
| 8 | 1000 | ˆ 136 | ˜ 152 | ¨ 168 | ¸ 184 | È 200 | Ø 216 | è 232 | ø 248 |
| 9 | 1001 | ‰ 137 | ™ 153 | © 169 | ¹ 185 | É 201 | Ù 217 | é 233 | ù 249 |
| A | 1010 | Š 138 | š 154 | ª 170 | º 186 | Ê 202 | Ú 218 | ê 234 | ú 250 |
| B | 1011 | ‹ 139 | › 155 | « 171 | » 187 | Ë 203 | Û 219 | ë 235 | û 251 |
| C | 1100 | Œ 140 | œ 156 | ¬ 172 | ¼ 188 | Ì 204 | Ü 220 | ì 236 | ü 252 |
| D | 1101 | SP 141 | SP 157 | - 173 | ½ 189 | Í 205 | Ý 221 | í 237 | ý 253 |
| E | 1110 | Ž 142 | ž 158 | ® 174 | ¾ 190 | Î 206 | Þ 222 | î 238 | þ 254 |
| F | 1111 | SP 143 | Ÿ 159 | ¯ 175 | ¿ 191 | Ï 207 | ß 223 | ï 239 | ÿ 255 |

### 3.2.8 Page 17 (PC866: Cyrillic #2)

| | HEX | 8 | 9 | A | B | C | D | E | F |
|---|---|---|---|---|---|---|---|---|---|
| HEX | BIN | 1000 | 1001 | 1010 | 1011 | 1100 | 1101 | 1110 | 1111 |
| 0 | 0000 | А 128 | Р 144 | а 160 | 176 | 192 | 208 | р 224 | Ё 240 |
| 1 | 0001 | Б 129 | С 145 | б 161 | 177 | 193 | 209 | с 225 | ё 241 |
| 2 | 0010 | В 130 | Т 146 | в 162 | 178 | 194 | 210 | т 226 | Є 242 |
| 3 | 0011 | Г 131 | У 147 | г 163 | 179 | 195 | 211 | у 227 | є 243 |
| 4 | 0100 | Д 132 | Ф 148 | д 164 | 180 | 196 | 212 | ф 228 | Ї 244 |
| 5 | 0101 | Е 133 | Х 149 | е 165 | 181 | 197 | 213 | х 229 | ї 245 |
| 6 | 0110 | Ж 134 | Ц 150 | ж 166 | 182 | 198 | 214 | ц 230 | Ў 246 |
| 7 | 0111 | З 135 | Ч 151 | з 167 | 183 | 199 | 215 | ч 231 | ў 247 |
| 8 | 1000 | И 136 | Ш 152 | и 168 | 184 | 200 | 216 | ш 232 | ° 248 |
| 9 | 1001 | Й 137 | Щ 153 | й 169 | 185 | 201 | 217 | щ 233 | • 249 |
| A | 1010 | К 138 | Ъ 154 | к 170 | 186 | 202 | 218 | ъ 234 | · 250 |
| B | 1011 | Л 139 | Ы 155 | л 171 | 187 | 203 | 219 | ы 235 | √ 251 |
| C | 1100 | М 140 | Ь 156 | м 172 | 188 | 204 | 220 | ь 236 | № 252 |
| D | 1101 | Н 141 | Э 157 | н 173 | 189 | 205 | 221 | э 237 | ¤ 253 |
| E | 1110 | О 142 | Ю 158 | о 174 | 190 | 206 | 222 | ю 238 | ■ 254 |
| F | 1111 | П 143 | Я 159 | п 175 | 191 | 207 | 223 | я 239 | SP 255 |

### 3.2.9 Page 18 (PC852: Latin2)

| | HEX | 8 | 9 | A | B | C | D | E | F |
|---|---|---|---|---|---|---|---|---|---|
| HEX | BIN | 1000 | 1001 | 1010 | 1011 | 1100 | 1101 | 1110 | 1111 |
| 0 | 0000 | Ç 128 | É 144 | á 160 | 176 | 192 | đ 208 | Ó 224 | ˗ 240 |
| 1 | 0001 | ü 129 | Ĺ 145 | í 161 | 177 | 193 | Đ 209 | ß 225 | ˝ 241 |
| 2 | 0010 | é 130 | ĺ 146 | ó 162 | 178 | 194 | Ď 210 | Ô 226 | ˛ 242 |
| 3 | 0011 | â 131 | ô 147 | ú 163 | 179 | 195 | Ë 211 | Ń 227 | ˇ 243 |
| 4 | 0100 | ä 132 | ö 148 | Ą 164 | 180 | 196 | ď 212 | ń 228 | ˘ 244 |
| 5 | 0101 | ů 133 | Ľ 149 | ą 165 | Á 181 | 197 | Ň 213 | ň 229 | § 245 |
| 6 | 0110 | ć 134 | ľ 150 | Ž 166 | Â 182 | Ă 198 | Í 214 | Š 230 | ÷ 246 |
| 7 | 0111 | ç 135 | Ś 151 | ž 167 | Ě 183 | ă 199 | Î 215 | š 231 | ¸ 247 |
| 8 | 1000 | ł 136 | ś 152 | Ę 168 | Ş 184 | 200 | ě 216 | Ŕ 232 | ° 248 |
| 9 | 1001 | ë 137 | Ö 153 | ę 169 | 185 | 201 | 217 | Ú 233 | ¨ 249 |
| A | 1010 | Ő 138 | Ü 154 | SP 170 | 186 | 202 | 218 | ŕ 234 | • 250 |
| B | 1011 | ő 139 | Ť 155 | ź 171 | 187 | 203 | 219 | Ũ 235 | ũ 251 |
| C | 1100 | î 140 | ť 156 | Č 172 | 188 | 204 | 220 | ý 236 | Ř 252 |
| D | 1101 | Ź 141 | Ł 157 | ş 173 | Ż 189 | 205 | Ţ 221 | Ý 237 | ř 253 |
| E | 1110 | Ä 142 | × 158 | « 174 | ż 190 | 206 | Ů 222 | ţ 238 | ■ 254 |
| F | 1111 | Ć 143 | č 159 | » 175 | 191 | ¤ 207 | 223 | ´ 239 | SP 255 |

### 3.2.10 Page19 (PC858: Euro)

| | HEX | 8 | 9 | A | B | C | D | E | F |
|---|---|---|---|---|---|---|---|---|---|
| HEX | BIN | 1000 | 1001 | 1010 | 1011 | 1100 | 1101 | 1110 | 1111 |
| 0 | 0000 | Ç 128 | É 144 | á 160 | ░ 176 | └ 192 | ð 208 | Ó 224 | — 240 |
| 1 | 0001 | ü 129 | æ 145 | í 161 | ▒ 177 | ┴ 193 | Ð 209 | ß 225 | ± 241 |
| 2 | 0010 | é 130 | Æ 146 | ó 162 | ▓ 178 | ┬ 194 | Ê 210 | Ô 226 | ‗ 242 |
| 3 | 0011 | â 131 | ô 147 | ú 163 | │ 179 | ├ 195 | Ë 211 | Ò 227 | ¾ 243 |
| 4 | 0100 | ä 132 | ö 148 | ñ 164 | ┤ 180 | ─ 196 | È 212 | õ 228 | ¶ 244 |
| 5 | 0101 | à 133 | ò 149 | Ñ 165 | Á 181 | ┼ 197 | € 213 | Õ 229 | § 245 |
| 6 | 0110 | å 134 | û 150 | ª 166 | Â 182 | ã 198 | Í 214 | µ 230 | ÷ 246 |
| 7 | 0111 | ç 135 | ù 151 | º 167 | À 183 | Ã 199 | Î 215 | þ 231 | ¸ 247 |
| 8 | 1000 | ê 136 | ÿ 152 | ¿ 168 | © 184 | ╚ 200 | Ï 216 | Þ 232 | ° 248 |
| 9 | 1001 | ë 137 | Ö 153 | ® 169 | ╣ 185 | ╔ 201 | ┘ 217 | Ú 233 | ¨ 249 |
| A | 1010 | è 138 | Ü 154 | ¬ 170 | ║ 186 | ╩ 202 | ┌ 218 | Û 234 | · 250 |
| B | 1011 | ï 139 | ø 155 | ½ 171 | ╗ 187 | ╦ 203 | █ 219 | Ù 235 | ¹ 251 |
| C | 1100 | î 140 | £ 156 | ¼ 172 | ╝ 188 | ╠ 204 | ▄ 220 | ý 236 | ³ 252 |
| D | 1101 | ì 141 | Ø 157 | ¡ 173 | ¢ 189 | ═ 205 | ¦ 221 | Ý 237 | ² 253 |
| E | 1110 | Ä 142 | × 158 | « 174 | ¥ 190 | ╬ 206 | Ì 222 | ¯ 238 | ■ 254 |
| F | 1111 | Å 143 | ƒ 159 | » 175 | ┐ 191 | ¤ 207 | ▀ 223 | ´ 239 | SP 255 |

### 3.2.11 Page 255 (User-defined Page)

| | HEX | 8 | 9 | A | B | C | D | E | F |
|---|---|---|---|---|---|---|---|---|---|
| HEX | BIN | 1000 | 1001 | 1010 | 1011 | 1100 | 1101 | 1110 | 1111 |
| 0 | 0000 | UD 128 | UD 144 | UD 160 | UD 176 | UD 192 | UD 208 | UD 224 | UD 240 |
| 1 | 0001 | UD 129 | UD 145 | UD 161 | UD 177 | UD 193 | UD 209 | UD 225 | UD 241 |
| 2 | 0010 | UD 130 | UD 146 | UD 162 | UD 178 | UD 194 | UD 210 | UD 226 | UD 242 |
| 3 | 0011 | UD 131 | UD 147 | UD 163 | UD 179 | UD 195 | UD 211 | UD 227 | UD 243 |
| 4 | 0100 | UD 132 | UD 148 | UD 164 | UD 180 | UD 196 | UD 212 | UD 228 | UD 244 |
| 5 | 0101 | UD 133 | UD 149 | UD 165 | UD 181 | UD 197 | UD 213 | UD 229 | UD 245 |
| 6 | 0110 | UD 134 | UD 150 | UD 166 | UD 182 | UD 198 | UD 214 | UD 230 | UD 246 |
| 7 | 0111 | UD 135 | UD 151 | UD 167 | UD 183 | UD 199 | UD 215 | UD 231 | UD 247 |
| 8 | 1000 | UD 136 | UD 152 | UD 168 | UD 184 | UD 200 | UD 216 | UD 232 | UD 248 |
| 9 | 1001 | UD 137 | UD 153 | UD 169 | UD 185 | UD 201 | UD 217 | UD 233 | UD 249 |
| A | 1010 | UD 138 | UD 154 | UD 170 | UD 186 | UD 202 | UD 218 | UD 234 | UD 250 |
| B | 1011 | UD 139 | UD 155 | UD 171 | UD 187 | UD 203 | UD 219 | UD 235 | UD 251 |
| C | 1100 | UD 140 | UD 156 | UD 172 | UD 188 | UD 204 | UD 220 | UD 236 | UD 252 |
| D | 1101 | UD 141 | UD 157 | UD 173 | UD 189 | UD 205 | UD 221 | UD 237 | UD 253 |
| E | 1110 | UD 142 | UD 158 | UD 174 | UD 190 | UD 206 | UD 222 | UD 238 | UD 254 |
| F | 1111 | UD 143 | UD 159 | UD 175 | UD 191 | UD 207 | UD 223 | UD 239 | UD 255 |

UD: Undefined

### 3.2.12 International Character Sets

| Country | ASCII code (Hex) | | | | | | | | | | | |
|---|---|---|---|---|---|---|---|---|---|---|---|---|
| | 23 | 24 | 40 | 5B | 5C | 5D | 5E | 60 | 7B | 7C | 7D | 7E |
| U.S.A | # | $ | @ | [ | \ | ] | ^ | ` | { | \| | } | ~ |
| France | # | $ | à | ° | ç | § | ^ | ` | é | ù | è | ¨ |
| Germany | # | $ | § | Ä | Ö | Ü | ^ | ` | ä | ö | ü | ß |
| U.K. | £ | $ | @ | [ | \ | ] | ^ | ` | { | \| | } | ~ |
| Denmark I | # | $ | @ | Æ | Ø | Å | ^ | ` | æ | ø | å | ~ |
| Sweden | # | ¤ | É | Ä | Ö | Å | Ü | é | ä | ö | å | ü |
| Italy | # | $ | @ | ° | \ | é | ^ | ù | à | ò | è | ì |
| Spain I | Pt | $ | @ | ¡ | Ñ | ¿ | ^ | ` | ¨ | ñ | } | ~ |
| Japan | # | $ | @ | [ | ¥ | ] | ^ | ` | { | \| | } | ~ |
| Norway | # | ¤ | É | Æ | Ø | Å | Ü | é | æ | ø | å | ü |
| Denmark II | # | $ | É | Æ | Ø | Å | Ü | é | æ | ø | å | ü |
| Spain II | # | $ | á | ¡ | Ñ | ¿ | é | ` | í | ñ | ó | ú |
| Latin America | # | $ | á | ¡ | Ñ | ¿ | é | ü | í | ñ | ó | ú |
| Korea | # | $ | @ | [ | ₩ | ] | ^ | ` | { | \| | } | ~ |

### 3.2.13 Extended font A

| Font | Code (HEX) |
|---|---|
| SP | 20 |
| + | 2B |
| , | 2C |
| – | 2D |
| 0 | 30 |
| 1 | 31 |
| 2 | 32 |
| 3 | 33 |
| 4 | 34 |
| 5 | 35 |
| 6 | 36 |
| 7 | 37 |
| 8 | 38 |
| 9 | 39 |
| < | 3C |
| > | 3E |

- For 20H through FFH, all codes other than the codes listed above are spaces.
- If the extended font A is selected, the international character sets cannot be selected and the page setting with the command cannot be effective.

## 3.3 Switches and Buttons

### 3.3.1 Power Button

1) The power button (rocker type) located on the front of the printer turns the power on or off.
   NOTE: Turn on/off the power only after connecting the power supply.

<Disabling the power button>

A power button cover option is available. Use this cover to avoid turning power off accidentally.

<Executing the power-off sequence>

It is recommended to turn the power off only after executing the power-off command (**DLE DC4** *fn* = 2). If the power is turned off without executing the power-off command, the ink will be wasted since the cleaning is done when the printer is turned on the next time, or the ink nozzle will be clogged if unused period exceeds two weeks. (Refer to Appendix G for details.)

### 3.3.2 Panel Button

The panel button of the printer is located beside the slip entrance.

The paper FEED button can be disabled with the **ESC c 5** command. When it is disabled, the paper roll FEED button cannot function.

1) Paper FEED button (PAPER FEED SW) (non-locking push button)

[Function] The printer feeds paper based on the line spacing set by the **ESC 2** or **ESC 3** command. The printer feeds the paper roll if the paper roll mechanism is enabled, or feeds the slip if the slip mechanism is enabled.

However, paper feeding using the paper FEED button cannot be performed under the following conditions:

- Between when the printer starts to eject a cut sheet and when the printer finishes waiting for removal of the cut sheet.
- Between when the printer waits for insertion of a cut sheet and when the printer finishes setting the print starting position.
- When head cleaning is performed, an error has occurred, or when the paper roll cover is open.

2) Cleaning button (CLEANING SW) (non-locking push button)

[Function] The printer performs the manual cleaning operation if the button is pressed for 3 seconds or more. Perform the manual cleaning when the print result is not dark enough.

### 3.3.3 DIP Switches

The DIP switch is located on the main board inside the bottom cover of the printer.

3.3.3.1 Serial interface specifications

**Table 3.3.1 DIP Switches**

| SW 1 | Function | ON | OFF |
|---|---|---|---|
| 1 | Reserved | -- | Fixed to Off |
| 2 | Interface condition selection | By DIP switch | By memory switch |
| 3 | Handshaking | XON/XOFF control | DTR/DSR control |
| 4 | Word length | 7 bits | 8 bits |
| 5 | Parity check | Yes | No |
| 6 | Parity selection | Even | Odd |
| 7 | Transmission speed selection | Refer to Table 3.3.2 | |
| 8 | | | |

**Table 3.3.2 Transmission Speed**

| Transmission speed (bps) | SW1-7 | SW1-8 |
|---|---|---|
| 9600 | ON | ON |
| 19200 | OFF | ON |
| 38400 | ON | OFF |
| 115200 | OFF | OFF |

bps: bits per second

NOTE: Changes in DIP switch settings are recognized only when the printer power is turned on or when the printer is reset by using the interface. If the DIP switch setting is changed after the printer power is turned on, the change does not take effect until the printer is turned on again or is reset.

3.3.3.2 Parallel interface specifications

**Table 3.3.3 DIP Switches**

| SW 1 | Function | ON | OFF |
|---|---|---|---|
| 1–8 | Reserved | -- | Fixed to Off. |

### 3.3.4 Memory Switches

Memory switches are defined:

- Memory switches: Msw 1, Msw 2, Msw 8
- Customized value
- Communication conditions of the serial interface

Customized value and communication conditions of the serial interface refer to **GS ( E**.

1) Memory switches

Msw 1 is defined as follows:

**Table 3.3.4 Memory Switch Msw 1**

| Bit | Function | 0 (Off) | 1 (On) |
|---|---|---|---|
| 1 | Transmits the power ON information | Does not transmit | Transmits |
| 2 | Reserved | -- | -- |
| 3 | Conditions for BUSY | Receive buffer-full or offline | Receive buffer-full |
| 4 | Data processing for receiving error | Prints "?" | Ignored |
| 5 | Automatic line feed | Disabled | Enabled |
| 6 | Connection of DM-D | Not connected | Connected |
| 7 | Pin #6: Selection of reset signal | Not used | Used |
| 8 | Pin #25: Selection of reset signal | Not used | Used |

NOTE: Msw 1-7 and 1-8 are effective only when the serial interface is used.

Msw 2 is defined as follows:

**Table 3.3.5 Memory Switch Msw 2**

| Bit | Function | 0 (Off) | 1 (On) |
|---|---|---|---|
| 1 | Reserved (the setting must not be changed) | -- | Fixed to On. |
| 2 | Autocutter operation | Disabled | Enabled |
| 3 | Reserved | -- | -- |
| 4 | Reserved | -- | -- |
| 5 | Reserved | -- | -- |
| 6 | Reserved | -- | -- |
| 7 | Reserved | -- | -- |
| 8 | Reserved | -- | -- |

Msw 8 is defined as follows:

**Table 3.3.6 Memory Switch Msw 8**

| Bit | Function | 0 (Off) | 1 (On) |
|---|---|---|---|
| 1 | Reserved | -- | -- |
| 2 | Reserved | -- | -- |
| 3 | Reserved | -- | -- |
| 4 | Reserved | -- | -- |
| 5 | Reserved | -- | -- |
| 6 | Slip print columns<br>(for font A / font B / extended font A) | 80 / 106 / 64 | 87 / 120 / 64 |
| 7 | Receipt print columns<br>(for font A / font B / extended font A)<br>Paper width 57.5 mm {2.26"}<br>69.5 mm {2.74"}<br>76 mm {2.99"}<br>82.5 mm {3.25"} | 30 / 40 / 24<br>36 / 48 / 28<br>40 / 53 / 32<br>42 / 56 / 34 | 32 / 45 / 24<br>39 / 54 / 28<br>43 / 60 / 32<br>46 / 64 / 34 |
| 8 | Paper roll cover open during printing | Automatically recoverable error | Recoverable error |

2) Customized value

**Table 3.3.7 Customized Value**

| Function | Value |
|---|---|
| Paper width selection | 57.5 mm {2.26"} |
| | 69.5 mm {2.74"} |
| | 76 mm {2.99"} |
| | 82.5 mm {3.25"} |

Refer to **GS ( E** for setting the customized value.

3) Communication conditions for the serial interface

**Table 3.3.8 Communication Conditions for the Serial Interface**

| Function | Value |
|---|---|
| Transmission speed | 2400 bps |
| | 4800 bps |
| | 9600 bps |
| | 19200 bps |
| | 38400 bps |
| | 57600 bps |
| | 115200 bps |
| Parity | None |
| | Odd |
| | Even |
| Handshaking | DTR/DSR control |
| | XON/XOFF control |
| Data length | 7 bits |
| | 8 bits |

Refer to **GS ( E** for setting the communication conditions of the serial interface.

## 3.4 Indicators

### 3.4.1 Panel LED Indicators

1) Power supply (POWER) LED: Green

On: Power is stable.
Off: Power is not stable.
Flashing: While some operations (power-on process, power-off process, or cleaning) are executed.
(Refer to Figure 3.4.1 and 3.4.2)

Power on (an operation is executed): Flashing

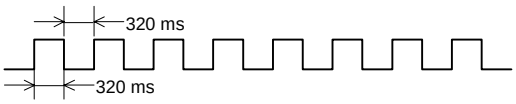


**Figure 3.4.1 Power LED Flashing Pattern**

Power off process (after **DLE DC4** *fn* = 2 is executed) Flashing

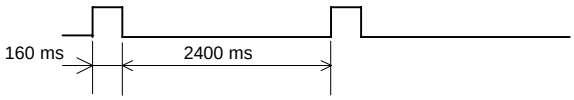


**Figure 3.4.2 Power LED Flashing Pattern**

2) Error (ERROR) LED: Red

On: Offline (except during paper feeding using the paper FEED button, during self-test, and cleaning)
Off: Online
Flashing: Error (refer to Section 3.8, Error Processing)

3) Ink out (INK OUT) LED: Red

Single-color model: Has one LED - for color 1 (SJIC8(K))
Two-color model: Has two LEDs - for color 1 (SJIC6(K)) and color 2 (SJIC7 (R), (B), (G)) (INK OUT LED)

The INK OUT LED indicates the following status:
Flashing: Ink near end.
Off: Ink cartridge is installed and ink remains adequate.
On: Ink cartridge is not installed or ink end. (Need to replace the ink cartridge.)

NOTES:
- The number of the printable characters from when the ink near end is detected to when the ink is ended differs depending on the conditions. If the ink near end is detected, prepare to replace the ink cartridge.
- Detection of ink cartridge installation and the ink near end status is performed only when the carriage cover is closed. If the carriage cover is open, the INK OUT LED keeps the same status as before the carriage cover was opened.

4) Paper roll end (PAPER OUT) LED: Red

On: The paper is empty or the paper roll near end is detected.
Off: Paper roll is loaded.
Flashing: Self-test standby state.

5) Cut sheet (CUT SHEET) LED: Green

On: When the cut sheet (slip) is set as the paper source.
Off: When the paper roll is set as the paper source.
Flashing: Cut sheet insertion / removal waiting state (refer to Figure 3.4.3).

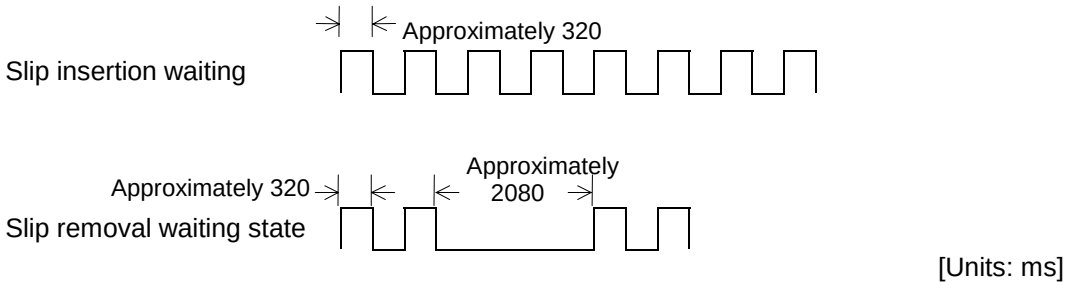


**Figure 3.4.3 CUT SHEET LED Flashing Pattern**

NOTE: If the cut sheet is removed during in the cut sheet removal waiting state, the SLIP LED light is on for one second.

### 3.5 Self-test

1) The printer has a self-test function that checks the following:
   - Control circuit functions
   - Printer mechanisms
   - Print quality
   - Control software version
   - DIP switch settings
   - Memory switch settings
   - Paper width to be set

2) Starting the self-test

   a) Self-test on a paper roll

   To start the self-test on a paper roll, hold down the FEED button while turning on the printer with the cover closed.

   b) Self-test on a cut sheet

   To start the self-test on a cut sheet, hold down the CLEANING button while turning on the printer with the cover closed. The printer flashes the CUT SHEET LED and enters the paper insertion waiting state. Insert a cut sheet to begin printing the printer status.

   NOTES:
   - The self-test on the cut sheet is performed with full-column printing regardless of the paper width that is currently selected. If the width of the cut sheet is narrower than full-column print width, the ink may make the platen dirty beyond the edge of the paper. Make sure to use a cut sheet with a width wider than 85 mm {3.35"}
   - When the self-test is performed on the cut sheet, the paper roll also must be loaded.

3) Self-test standby state

   a) Self-test on a paper roll

   After printing the current printer status, the printer prints the message "If you want to continue SELF-TEST printing, please press FEED button." The PAPER OUT LED indicator flashes and the printer enters the test printing standby state.

   b) Self-test on a cut sheet

   After printing the current printer status, the printer ejects the cut sheet and waits for the next sheet of paper to be inserted. Insert another cut sheet to begin printing the test.

4) Ending the self-test

   After a number of lines are printed, the printer indicates the end of the self-test by printing "*** completed ***," initializes, and goes into the normal mode.

   The printer then enters the normal print mode.

### 3.6 Hexadecimal Dumping

1) Hexadecimal dumping function

This function prints the data transmitted from the host computer in hexadecimal numbers and in their corresponding characters.

2) Starting hexadecimal dumping

Open the paper roll cover and turn the power on while pressing the paper FEED button; then close the paper roll cover. The printer first prints "Hexadecimal Dump" on the paper roll and prints the received print data in hexadecimal numbers and their corresponding characters.

NOTES:
- If no characters correspond to the data received, the printer prints "."
- During hexadecimal dumping, any commands other than **DLE EOT**, **DLE ENQ**, or **DLE DC4** do not function.

3) Ending hexadecimal dumping

Hexadecimal dumping ends by turning the power off, pressing the paper FEED button three times with the cover closed, or resetting the printer through the interface after printing has finished.

<Printing example>

```
Hexadecimal Dump

1B  21  00  1B  26  02  40  40  :   .   !   .   .   &   .   @   @
1B  25  01  1B  63  34  00  1B  :   .   %   .   .   c   4   .   .
41  42  43  44  45  46  47  48  :   A   B   C   D   E   F   G   H
```

### 3.7 Memory Switches Setting Mode

1) Memory switches setting function

This function sets memory switches using the panel button and the paper roll cover.

Memory switches can be set to control the following:

① Enable or disable autocutter operation

② Set the communication condition of the serial interface

③ Setting the conditions for communication

- Handling a reception error occurs
- Conditions for BUSY

④ Automatic line feed

⑤ Interface reset signal

2) Mode start

Open the paper roll cover and turn the power on while pressing the paper FEED button; then press the paper FEED button twice and close the paper roll cover. Press the paper FEED button once more, and the instructions for setting the memory switches are printed. Follow these instructions.

3) Mode end

At the end of the setting mode, save the setting contents, and initialize the printer. After initializing the printer, the printer is ready to print.

## 3.8 Error Processing

### 3.8.1 Error Types

1) Errors that automatically recover

**Table 3.8.1 Errors that Automatically Recover**

| Error | Description | ERROR LED flashing pattern (Approximately 320 ms) | Recovery condition |
|---|---|---|---|
| Paper roll cover open error (*1) | Printing on the paper roll is not performed correctly due to a cover-open | | Recovers automatically when the cover is closed. |
| Print head high temperature error (*2) | The temperature of the print head is extremely high (expected temperature in normal operation). | | Recovers automatically when the print head cools. |
| Print head low temperature error (*2) | The temperature of the print head is extremely low (expected temperature in normal operation). | | Recovers automatically when the print head temperature increases. |

*1: This is selectable with the memory switch as an error that automatically recovers.

*2: If the head temperature is only slightly out of range the printer can recover, but a large deviation from the appropriate range causes an unrecoverable error as an internal circuit error.

2) Errors that have the possibly of recovery

**Table 3.8.2 Errors that Have the Possibility of Recovery**

| Error | Description | ERROR LED flashing pattern (Approximately 320 ms) | Recovery condition |
|---|---|---|---|
| Paper roll cover open error (*1) | Printing on the paper roll is not performed correctly due to a cover-open. | | Recovers by **DLE ENQ** (*n* = 1) or **DLE ENQ** (*n* = 2) when the cover is closed. |
| Autocutter error | The autocutter does not work correctly. | 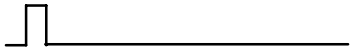 | Recovers by **DLE ENQ** (*n* = 1) or **DLE ENQ** (*n* = 2) when the cover is closed. |
| Carriage home position detection error | The home position cannot be detected due to a paper jam. | 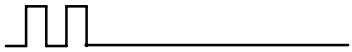 | Recovers by **DLE ENQ** (*n* = 1) or **DLE ENQ** (*n* = 2) when the cover is closed. |
| Carriage out of phase detection error | The carriage is out of phase. | 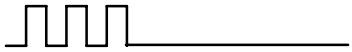 | Recovers by **DLE ENQ** (*n* = 1) or **DLE ENQ** (*n* = 2) when the cover is closed. |
| Cut sheet ejection error | The cut sheet cannot be ejected even if a certain amount of feeding is tried. | | Recovers by **DLE ENQ** (*n* = 1) or **DLE ENQ** (*n* = 2) when the cover is closed. |

*1: This is selectable with a memory switch as an error that has the possibility of recovery.

NOTES:
- If the printer recovers from an error that has the possibility of recovery with **DLE ENQ (***n* = 1) when the printer has selected the slip as the paper source and an error has occurred while printing on the slip, the printer ejects the slip first if it is still remains, and enters the paper waiting state. However, if the printer recovers from a cut sheet ejection error, the printer ejects the slip only, and does not enter the paper insertion waiting state.
- If the printer recovers from an error that has the possibility of recovery with **DLE ENQ** (*n* = 1) when the printer has selected the slip as the paper source and an error has occurred except when printing on the slip, the printer ejects the slip first if it is still remains, and selects the slip as the paper source, and does not enter the paper insertion waiting state.
- If the printer recovers from an error that has the possibility of recovery with **DLE ENQ** (*n* = 2) when slip is set as the paper source, the printer ejects the slip only if it still remains.

3) Errors that are impossible to recover

**Table 3.8.3 Errors that are Impossible to Recover**

| Error | Description | ERROR LED flashing pattern (Approximately 320 ms) | Recovery condition |
|---|---|---|---|
| CPU execution error | The CPU executes an incorrect address or the I/F board is not connected. | | Impossible to recover. |
| R/W error | After R/W checking, the printer does not work correctly. | 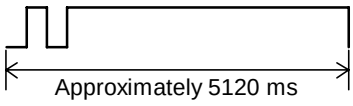  | Impossible to recover. |
| High voltage error | The power supply voltage is extremely high. | 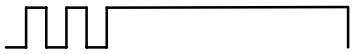 | Impossible to recover. |
| Low voltage error | The power supply voltage is extremely low. | 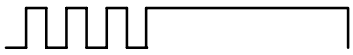 | Impossible to recover. |
| Internal circuit error | Internal circuit does not work correctly. | 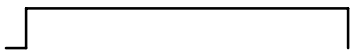 | Impossible to recover. |
| UIB error | UIB does not work correctly. | | Impossible to recover. |

NOTE: When any error shown above occurs, turn off the power as soon as possible.

### 3.8.2 Printer Operation When an Error Occurs

The printer executes the following operations when detecting an error.

- Stops all printer operations for the selected paper section.
- Goes BUSY (Refer to Section 3.3.4 Memory Switches, when the printer is set to offline if the printer is set offline with memory switch Msw 1-3).
- Flashes the ERROR LED.

### 3.8.3 Data Receive Error

If one of the following errors occurs during serial interface communication, the printer prints "?" or ignores the data, depending on the setting memory switch Msw 1-4.

- Parity error
- Framing error
- Overrun error

### 3.9 Paper Sensors

The printer has four paper sensors, as follows:

Slip:

- TOF (top of form) sensor
- BOF (bottom of form) sensor

Receipt:

- Paper roll near-end sensor
- Paper roll end sensor

#### 3.9.1 Sensors and LED Indicators

1) TOF sensor

The slip TOF sensor is located in the slip paper path and detects the presence of a cut sheet at the slip stopper in the paper path. The CUT SHEET LED comes on, goes off, and flashes accordingly in each printer status. The TOF sensor also detects whether the cut sheet is removed or not after finishing printing (related to the BOF sensor).

2) BOF sensor

The slip BOF sensor is located in the slip entrance and detects whether the cut sheet is inserted correctly. If the printer waits for insertion of a cut sheet, the printer does not proceed to the next operation until the paper has been removed. (The CUT SHEET LED indicator continues flashing.)

The BOF sensor is enabled in the following three cases and changes its status when it detects a BOF:

- When the TOF sensor detects paper presence
- Between the cut sheet insertion waiting state and the removal waiting state.
- When the printer is clamping (regardless of the paper source)

At all other times, the BOF sensor is not enabled and will not change its status and always reports that paper is not present.

Example: If a cut sheet is inserted while the paper roll is selected, the BOF sensor is not enabled and will not change its status when the paper is detected only by the BOF sensor.

3) Paper roll near-end sensor

The near-end sensor is located on the roll paper supply device. It detects the near-end of the paper roll by detecting the paper roll diameter. When it detects the near-end of the paper, the PAPER OUT LED indicator lights.

4) Paper roll end sensor

The paper end sensor is located in the paper path. It detects the presence of paper from the paper roll in the paper path of the printer mechanism. When there is no paper in the paper path (paper end status), the PAPER OUT LED and ERROR LED indicator light.

### 3.9.2 Sensors and Printing

When the printer detects a paper near-end, it either stops or continues printing, depending on the **ESC c 4** setting. The corresponding sensors are as follows:

- Paper roll near-end sensor

Since the paper roll end sensor is used for paper-end detection, the printer stops printing when the paper-end is detected. Use the paper roll near-end sensor for detecting a roll paper end, and also use the paper roll end sensor, if necessary.

When a printing stop is enabled and the paper roll near-end sensor detects a paper near end, the printer automatically stops after printing the line being printed. To restart printing, load the paper and close the printer cover. The printer starts initializing and continues printing data stored in the print buffer.

## 3.10 Printer Cover Sensors and Cover Opening/Closing Operation

### 3.10.1 Carriage Cover Open Sensor

The carriage cover open sensor monitors the carriage cover for slips. When the sensor detects a cover open, the printer stops printing after finishing printing on the sheet in the current print, even though the printer is printing on the paper roll, and the carriage moves to the home position, then stops, and automatically goes offline. The printer is set back online by closing the carriage cover. Since opening/closing the carriage cover causes misalignment of the print position, do not open/close the carriage cover while printing.

### 3.10.2 Opening/Closing the Carriage Cover

To open the carriage cover, lift up the cover open hooks (located in both ends of the carriage cover). When closing the carriage cover, make sure that the hooks fit the carriage cover by holding the cover gently with your hands.

### 3.10.3 Paper Roll Cover Open Sensor

The cover-open sensor monitors the paper roll cover. When the sensor detects a cover open, the printer stops printing immediately, even though the printer is printing on the paper roll or the slip, and automatically goes offline. The ERROR LED (automatic error recovery) flashes when the cover is open while the printer is printing. When the printer cover is closed, the ERROR LED goes off, and the printer starts initializing automatically and begins printing at the beginning of the line it was printing when the cover was opened.

When memory switch Msw 8-8 is On (possible error recovery is selected), it is an error if the paper roll cover is opened while printing. (It is an error that has the possibility to recover.)

NOTES:
- To open the paper roll cover, be sure to press the paper roll cover open button.
- Whether the paper roll cover is open or not does not affect the status reported by the paper roll end sensor.

### 3.10.4 Opening/Closing the Paper Roll Cover

To open the paper roll cover, press the paper roll open button, which is located in the right side of the printer upper case. To close the paper roll cover, be sure to press the upper side of the paper roll cover gently with your hands. (When closing the paper roll cover, make sure that internal lever hooks are used to fix the paper roll cover.)

### 3.11 Ink Cartridge Sensor and Exchanging the Ink Cartridge

The installation of the ink cartridge is detected when the cartridge passes the carriage by a reflection photo sensor along the cartridge.

NOTES:
- While the carriage cover is open, the status of the ink cartridge remains in the same status as before the carriage cover was opened.
- If **DLE EOT** (*n* =7) is performed while the carriage cover is open, the printer's response may differ from the current cartridge status.
- To detect the status of the ink with **DLE EOT** (*n* = 7) or **GS j**, be sure to close the carriage cover.
- If the carriage cover is open, there is a possibility that the ink ASB (**GS j**) may not be the same as the actual state of the ink cartridge.

#### 3.11.1 Ink Cartridge Sensor

The ink cartridge sensor detects whether the ink cartridge is installed or not. If the ink cartridge is not installed, both the INK OUT LED and ERROR LED light and the printer goes offline. (In a two-color printer model, when both ink cartridges for the main color and the sub color are not installed, the printer goes offline.)

#### 3.11.2 Ink Near-End Sensor

The ink near-end sensor monitors the ink remaining in the ink cartridge and the INK OUT LED lights if the ink near-end is detected. After detection of the ink near-end, the printer ink end sensor determines when the specified ink amount is consumed by counting the number of ink shots in printing or cleaning. If the ink ends, both the INK OUT LED and ERROR LED light and the printer goes offline.

The total number of printable characters after the ink near-end is detected and till the ink end is detected depends on the printing conditions. Prepare to exchange the ink cartridge when the printer signals the ink near-end.

#### 3.11.3 Exchanging the Ink Cartridge

To exchange the ink cartridge, open the carriage cover, and take the ink cartridge out by the upper tab with your fingers. Peel the upper seal of the new ink cartridge and push the upper side of the ink cartridge to fix it correctly.

After installing the new ink cartridge, closing the carriage cover lets the carriage move, and the printer detects the status of the ink cartridge. Then, the printer recovers from the offline state and becomes ready to print. Refer to Appendix B for details.

NOTE: Since ink may still remain in the ink supply part (protrusion of the lower part of the ink cartridge) after the ink cartridge has been installed, do not touch that part. Take this into consideration when discarding the used ink cartridge.

### 3.12 Print Buffer-full Printing

When subsequent data is received after the printer processes one line of data in the print buffer, the printer automatically prints the processed line and feeds the paper by one line.

## 3.13 Paper Jam Removal

### 3.13.1 Slip

Remove the jammed paper from the slip paper entrance if the paper is jammed. When the jammed paper cannot be removed, open the carriage cover, then remove the jammed paper.

### 3.13.2 Paper Roll

Press the paper roll cover open button; then remove the jammed paper.

# 4. CASE SPECIFICATIONS

## 4.1 External Dimensions and Mass

Height: 188 mm {7.40"}
Width: 251 mm {9.88"}
Depth: 237 mm {9.33"}
Mass: Approximately 4.9 kg {10.8 lb}
(including the ink cartridge and excluding a paper roll and a power supply unit)
[All numeric values are typical.]

## 4.2 Color

Epson standard color:
Epson Cool White (E.C.W.)
Epson Dark Gray (E.D.G.)

## 4.3 External Appearance

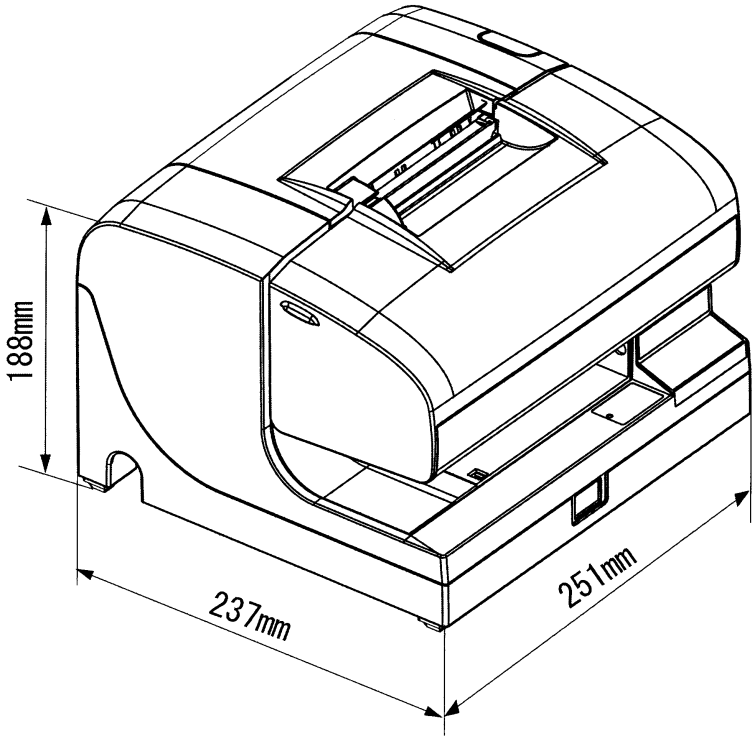


**Figure 4.3.1 External Appearance**

### 4.4 Installing the Customer Display Fixing Plate

The user can attach the customer display fixing plate to the bottom of the printer.
The customer display fixing plate can be attached to one of the two sides – left or right. To fix the plate, secure two resinoid screws attached to the DP-502 on the bottom of the customer display. (Refer to Figure 4.4.1.)

NOTE: The customer display fixing plate for the DP-502 must be used.

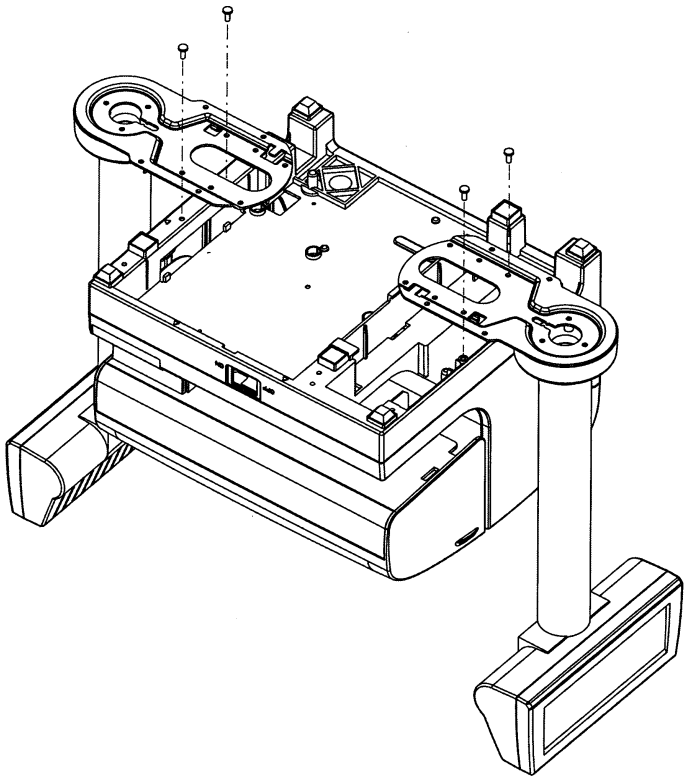

**Figure 4.4.1 Installing the Customer Display Fixing Plate**

### 4.5 Installation of the Power Supply Unit (PS-180)

The printer can contain the power supply unit (Seiko Epson's power supply PS-180).

Method to contain the power supply unit

① Bundle the power supply cord in the length as shown in Figure 4.5.1.

② Put the bundled cord into the printer first; then insert the power supply as shown in Figure 4.5.1

③ Fix the power supply fixing plate with two screws that are packed with the printer. (See Figure 4.5.2)

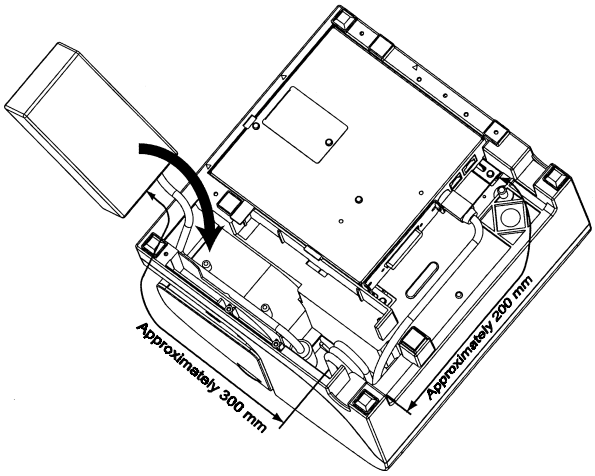


**Figure 4.5.1**
**Containing the Power Supply (1)**

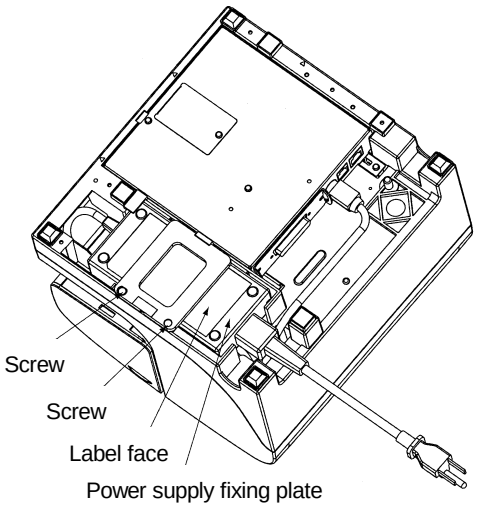


**Figure 4.5.2**
**Containing the Power Supply (2)**

# 5. OPTIONS AND CONSUMABLES

## 5.1 Standard Accessories

- Paper roll (diameter 60 mm {2.36"}) × 1 roll
- Exclusive ink cartridge(s) TM-J7500: SJIC8 (K) × 1
  TM-J7600: SJIC6 (K) × 1
  SJIC7 (any one of (R), (B), or (G)) × 1
- User's manual × 1
- Power switch cover × 1
- Power supply fixing plate × 1 (screw × 2)

## 5.2 Options

1) Power supply: EPSON PS-180
2) UB series interface boards (except UB-P02)

## 5.3 Consumables

1) Ink cartridges TM-J7500: SJIC8 (K)
   TM-J7600: SJIC6 (K)
   SJIC7 (R), (B), (G)

# 6. COMMANDS

## 6.1 Command Notation

### XXXX

| | |
|---|---|
| [Name] | The name of the command. |
| [Format] | The code sequence.<br>*[ ]k* indicates the contents of the [ ] should be repeated *k* times. |
| [Range] | Gives the allowable ranges, if any, for the command parameters. |
| [Default] | Gives the default values, if any, for the arguments. |
| [Description] | Describes the function of the command.<br>"–" in the table indicates 0 or 1. |
| [Notes] | Provides important information on setting and using the printer command, if necessary. |
| [Reference] | Gives the reference, if any. |

## 6.2 Explanation of Terms

1) Real-time command
   Real-time commands are identified with a **DLE** extension such as **DLE EOT** or **DLE ENQ**. The printer executes these commands as soon as they are received.

2) Obsolete command
   Obsolete commands are commands that will not be supported by future printer models. Therefore, we recommend replacing them with more recent, upward-compatible commands that have the same functions.

3) NV memory write command
   NV memory write commands deletes or stores data in the NV memory (flash ROM)
   **GS ( A** <some functions>, **GS ( C** <some functions>, **GS ( E** <some functions>,
   **GS ( L** / **GS 8 L** <some functions>, **GS ( M** <some functions>, **GS g 0**

4) ESC/ POS Handshaking Protocol
   ESC/ POS Handshaking Protocol is a handshaking protocol between the host computer and the printer when the printer transmits data. The ESC/ POS Handshaking Protocol is required if the following commands are executed:
   **GS ( C** <some functions>, **GS ( L** / **GS 8 L** <some functions>

5) Print buffer
   The print buffer is used to store image data for printing

6) Receive buffer
   The receive buffer is used to store data from the host computer. All received data is stored in this buffer and processed in the order received.

7) Active sheet
   The active sheet is the paper source targeted for processing data. The active sheet is one of the following: roll paper or slip.

8) The horizontal or vertical motion unit

The horizontal or vertical motion units are used for calculating the setting values for various commands and can be changed with **GS P**.

9) Printing area

Printing range is set by command.

10) The left edge of the printing area

The left edge of the printing area indicates the first column for character(s) to be developed, and also the printing position to be moved when ($n_L + n_H \times 256$) = 0 is specified with **ESC $**.

- In standard mode, the left edge of the printing area is the position for left margin.
- In page mode, the left edge of the printing area is the left edge of the printing area when the print starting position specified with **ESC T** is viewed as the left top of the printing area.

11) Column format / Raster format

Column format is a format that data is set in descending order (bit 7, 6, …, 0) from the top vertically.

| | | | |
|---|---|---|---|
| *d1* | *d4* | *d7* | MSB<br>LSB |
| *d2* | *d5* | *d8* | MSB<br>LSB |
| *d3* | *d6* | *d9* | MSB<br>LSB |

Raster format is a format that data is set in descending order (bit 7, 6, …, 0) from the left horizontally.

| | | |
|---|---|---|
| *d1* | *d2* | *d3* |
| *d4* | *d5* | *d6* |
| *d7* | *d8* | *d9* |
| MSB LSB | MSB LSB | MSB LSB |

12) Inch

A unit of length. One inch is 25.4 mm.

13) dpi

dpi (dots per inch) is the number of dots per 25.4 mm.

### 6.3 Control Commands

## HT

[Name] Horizontal tab

[Format]

| | |
|---|---|
| ASCII | HT |
| Hex | 09 |
| Decimal | 9 |

[Description]
- Moves the printing position to the next horizontal tab position.

## LF

[Name] Print and line feed

[Format]

| | |
|---|---|
| ASCII | LF |
| Hex | 0A |
| Decimal | 10 |

[Description]
- Prints the data in the print buffer and feeds one line, based on the current line spacing.

## FF

[Name] Print and eject cut sheet (in standard mode)
Print and return to standard mode (in page mode)

[Format]

| | |
|---|---|
| ASCII | FF |
| Hex | 0C |
| Decimal | 12 |

[Description: In standard mode]
- When slip paper is selected as the active sheet, the printer prints the data in the print buffer and ejects the slip paper.
- After the slip is ejected, the printer selects the roll paper as the active sheet.

[Description: In page mode]
- Prints all the data in the print buffer collectively and switches from page mode to standard mode.

## CR

[Name] Print and carriage return

[Format] ASCII CR
Hex 0D
Decimal 13

[Description] • Executes one of the following operations.

| Condition | Function |
|---|---|
| When automatic line feed is enabled | Functions the same as **LF** |
| When automatic line feed is disabled and when using serial interface model | In standard mode, prints the data in the print buffer, and sets the printing position to the beginning of the print line.<br>In page mode, sets the printing position to the beginning of the print line. |

## CAN

[Name] Cancel print data in page mode

[Format] ASCII CAN
Hex 18
Decimal 24

[Description] • In page mode, deletes all the print data in the current printing area.

## DLE EOT *n [a]*

[Name] Transmit real-time status

[Format]

| | | | | |
|---|---|---|---|---|
| ASCII | DLE | EOT | *n* | *[a]* |
| Hex | 10 | 04 | *n* | *[a]* |
| Decimal | 16 | 4 | *n* | *[a]* |

[Range] $1 \le n \le 5$, $n = 7$
$a = 1, 2$ (when ($n = 7$))

[Description] • Transmits the real-time status.

| *n* | *a* | Function |
|---|---|---|
| 1 | -- | Transmits printer status. |
| 2 | -- | Transmits offline cause status. |
| 3 | -- | Transmits error cause status. |
| 4 | -- | Transmits roll paper sensor status. |
| 5 | -- | Transmits slip status. |
| 7 | 1 | Transmits ink status A. |
| | 2 | Transmits ink status B. |

• When ($1 \le n \le 5$) is specified, *a* is not necessary.

• This printer transmits the following status in real time.

• Printer status ($n = 1$)

| Bit | Off/On | Hex | Decimal | Status |
|---|---|---|---|---|
| 0 | Off | 00 | 0 | Fixed. |
| 1 | On | 02 | 2 | Fixed. |
| 2 | Off | 00 | 0 | Drawer kick out connector pin 3 is LOW. |
| | On | 04 | 4 | Drawer kick out connector pin 3 is HIGH. |
| 3 | Off | 00 | 0 | Online. |
| | On | 08 | 8 | Offline. |
| 4 | On | 10 | 16 | Fixed. |
| 5 | -- | -- | -- | Reserved. |
| 6 | Off | 00 | 0 | Paper FEED button is turned off. |
| | On | 40 | 64 | Paper FEED button is turned on. |
| 7 | Off | 00 | 0 | Fixed. |

• Offline cause status (*n* = 2)

| Bit | Off/On | Hex | Decimal | Status |
|---|---|---|---|---|
| 0 | Off | 00 | 0 | Fixed. |
| 1 | On | 02 | 2 | Fixed. |
| 2 | Off | 00 | 0 | Cover is closed. |
| | On | 04 | 4 | Cover is open. |
| 3 | Off | 00 | 0 | Paper is not being fed by the paper FEED button. |
| | On | 08 | 8 | Paper is being fed by the paper FEED button. |
| 4 | On | 10 | 16 | Fixed. |
| 5 | Off | 00 | 0 | No roll paper end stop. |
| | On | 20 | 32 | Printing stopped by roll paper end sensor |
| 6 | Off | 00 | 0 | No error. |
| | On | 40 | 64 | Error. |
| 7 | Off | 00 | 0 | Fixed. |

Bit 2: While the paper roll cover or the carriage cover is open, the bit indicates “cover is open.”

• Error cause status (*n* = 3)

| Bit | Off/On | Hex | Decimal | Status |
|---|---|---|---|---|
| 0 | Off | 00 | 0 | Fixed. |
| 1 | On | 02 | 2 | Fixed. |
| 2 | Off | 00 | 0 | No mechanical error. |
| | On | 04 | 4 | Mechanical error. |
| 3 | Off | 00 | 0 | No autocutter error. |
| | On | 08 | 8 | Autocutter error. |
| 4 | On | 10 | 16 | Fixed. |
| 5 | Off | 00 | 0 | No unrecoverable error. |
| | On | 20 | 32 | Unrecoverable error. |
| 6 | Off | 00 | 0 | No automatically recoverable error. |
| | On | 40 | 64 | Automatically recoverable error. |
| 7 | Off | 00 | 0 | Fixed. |

Bit 2: If "paper roll cover open" is set as a recoverable error using the memory switch, a mechanical error occurs if the cover is open while printing on the paper roll.

Bit 6: If "paper roll cover open" is set as an automatically recoverable error using the memory switch, an automatically recoverable error occurs if the cover is open while printing on the paper roll. The head high/low temperature errors are also regarded as automatically recoverable errors.

• Roll paper sensor status (*n* = 4)

| Bit | Off/On | Hex | Decimal | Status |
|---|---|---|---|---|
| 0 | Off | 00 | 0 | Fixed. |
| 1 | On | 02 | 2 | Fixed. |
| 2, 3 | Off | 00 | 0 | Roll paper near-end sensor: paper adequate. |
| | On | 0C | 12 | Roll paper near-end sensor: paper near end. |
| 4 | On | 10 | 16 | Fixed. |
| 5, 6 | Off | 00 | 0 | Roll paper end sensor: paper present. |
| | On | 60 | 96 | Roll paper end sensor: paper not present. |
| 7 | Off | 00 | 0 | Fixed. |

Bits 5 and 6: The paper roll cover closed status is maintained while the paper roll cover is open.

• Slip paper status (*n* = 5)

| Bit | Off/On | Hex | Decimal | Status |
|---|---|---|---|---|
| 0 | Off | 00 | 0 | Fixed. |
| 1 | On | 02 | 2 | Fixed. |
| 2 | Off | 00 | 0 | Slip selected as the active sheet. |
| | On | 04 | 4 | Slip not selected as the active sheet. |
| 3 | Off | 00 | 0 | Not waiting for slip paper insertion. |
| | On | 08 | 8 | Waiting for slip paper insertion. |
| 4 | On | 10 | 16 | Fixed. |
| 5 | Off | 00 | 0 | TOF sensor: paper present. |
| | On | 20 | 32 | TOF sensor: paper not present. |
| 6 | Off | 00 | 0 | BOF sensor: paper present. |
| | On | 40 | 64 | BOF sensor: paper not present. |
| 7 | Off | 00 | 0 | Fixed. |

Bit 6: Refer to Section 3.9.1, Sensors and LED Indicators, part 2) BOF sensor, for the status of the BOF sensor.

• Ink status A (*n* = 7, *a* = 1)

| Bit | Off/On | Hex | Decimal | Status |
|---|---|---|---|---|
| 0 | Off | 00 | 0 | Fixed. |
| 1 | On | 02 | 2 | Fixed. |
| 2 | Off | 00 | 0 | Ink near-end sensor: ink adequate (color 1). |
| | On | 04 | 4 | Ink near-end sensor: ink near end (color 1). |
| 3 | Off | 00 | 0 | Ink present (color 1). |
| | On | 08 | 8 | Ink not present (color 1). |
| 4 | On | 10 | 16 | Fixed. |
| 5 | Off | 00 | 0 | Ink cartridge sensor: cartridge present (color 1). |
| | On | 20 | 32 | Ink cartridge sensor: cartridge not present (color 1). |
| 6 | Off | 00 | 0 | Cleaning not being performed. |
| | On | 40 | 64 | Cleaning being performed. |
| 7 | Off | 00 | 0 | Fixed. |

Bits 2,3 and 5: The carriage cover closed status is maintained while the carriage cover is open.

• Ink status B (*n* = 7, *a* = 2)

| Bit | Off/On | Hex | Decimal | Status |
|---|---|---|---|---|
| 0 | Off | 00 | 0 | Fixed. |
| 1 | On | 02 | 2 | Fixed. |
| 2 | Off | 00 | 0 | Ink near-end sensor: ink adequate (color 2). |
| | On | 04 | 4 | Ink near-end sensor: ink near end (color 2). |
| 3 | Off | 00 | 0 | Ink present (color 2). |
| | On | 08 | 8 | Ink not present (color 2). |
| 4 | On | 10 | 16 | Fixed. |
| 5 | Off | 00 | 0 | Ink cartridge sensor: cartridge present (color 2). |
| | On | 20 | 32 | Ink cartridge sensor: cartridge not present (color 2). |
| 6 | -- | -- | -- | Reserved. |
| 7 | Off | 00 | 0 | Fixed. |

• The carriage cover closed status is maintained while the carriage cover is open.
• The status for the single-color printer (TM-J7500) should always be "ink present," "ink adequate," and "cartridge present."

[Notes]

- Take the following into consideration:
  - If print data includes a character string matching this command, the printer performs this command. Users must consider this.
    For example: Bit image data might accidentally include a data string matching this command.
  - Do not embed this command within another command.
    For example: Graphic data might include this command.
- Transmit this command according to the following method:
  - When one real-time status command is transmitted, any following data must not be transmitted until the status is received.
  - However, if the real-time commands are required to transmit continuously, it is possible to transmit up to nine real-time commands at once.
    In this case, any following data must not be transmitted until the all status is received.
    If real-time commands are transmitted without using the above method, the status may not be received.
- This command is ignored when block data is transmitted.
- If the status is not received for 2 seconds (maximum period when operating the autocutter) and this state occurs several times, probably the printer power is not turned on or the interface cable is not connected.

## DLE ENQ *n*

[Name] Send real-time request to printer

[Format]

| | | | |
|---|---|---|---|
| ASCII | DLE | ENQ | *n* |
| Hex | 10 | 05 | *n* |
| Decimal | 16 | 5 | *n* |

[Range] $1 \le n \le 3$

[Description]
- Responds to a request from the host computer.

| *n* | Function |
|---|---|
| 1 | Recovers from an error and restarts printing from the line where the error occurred.<br>• This command is ignored unless the recoverable error has occurred. |
| 2 | Recovers from an error after clearing the receive and print buffers.<br>• This command is ignored unless the recoverable error has occurred. |
| 3 | Cancels the cut sheet waiting status after clearing the receive and print buffers.<br>• This command is ignored unless the cut sheet insertion is waiting. |

[Notes]
- Specify ($n$ = 1) or ($n$ = 2) after removing the cause of the error.
- Take the following into consideration:
  - If print data includes a character string matching this command, the printer performs the command. Users must consider this.
    For example: Graphic data might accidentally include a data string matching this command.
  - Do not embed this command within another command.
    For example: Graphic data might include this command.
- This command is ignored when block data is transmitted.

## DLE DC4 *fn m t* (*fn* = 1)

[Name] Generate pulse in real-time

[Format]

| | | | | | |
|---|---|---|---|---|---|
| ASCII | DLE | DC4 | *fn* | *m* | *t* |
| Hex | 10 | 14 | *fn* | *m* | *t* |
| Decimal | 16 | 20 | *fn* | *m* | *t* |

[Range]
*fn* = 1
*m* = 0, 1
$1 \le t \le 8$

[Description]
- Outputs the pulse specified by *t* in real-time to the connector pin specified by *m*.

| *m* | Connector pin |
|---|---|
| 0 | Drawer kick out connector pin 2. |
| 1 | Drawer kick out connector pin 5. |

- The pulse on time or off time is set to [$t \times 100$ ms].

[Notes]
- Take the following into consideration:
  - If print data includes a character string with this command, the printer performs the command. Users must consider this.
    For example: Graphic data might accidentally include a data string matching this command.
  - Do not embed this command within another command.
    For example: Graphic data might include this command.
- This command is ignored in the following states.
  - During transmission of block data.
  - During driving of drawer kick-out.
  - When an unrecoverable error has occurred.
- If the printer receives this command while the printer mechanism is operating, such as printing or cleaning, the printer processes this command after finishing the mechanism's operation.

## DLE DC4 *fn a b* (*fn* = 2)

[Name] Execute power-off sequence

[Format]

| | | | | | |
|---|---|---|---|---|---|
| ASCII | DLE | DC4 | *fn* | *a* | *b* |
| Hex | 10 | 14 | *fn* | *a* | *b* |
| Decimal | 16 | 20 | *fn* | *a* | *b* |

[Range]
*fn* = 2
*a* = 1
*b* = 8

[Description]
- Executes the printer power-off sequence and transmits the power-off notice.
  - Stores the values of the maintenance counter.
  - Sets the interface to BUSY.
  - Sets the printer in standby mode.

[Notes]
- Take the following into consideration:
  - If print data includes a character string matching this command, the printer performs the command. Users must consider this.
    For example: Graphic data might accidentally include a data string matching this command.
  - Do not embed this command within another command.
    For example: Graphic data might include this command.
- This command does not shut the power off. Make sure to have the operator turn off the power after receiving the power-off notice.
- If this command is encountered, the printer will not continue to process anything. To recover the printer to print again, it is necessary to turn the power on again or execute a hardware reset.
- This command is ignored when block data is transmitted.

## DLE DC4 *fn m* (*fn* = 7)

[Name] Transmit specified status in real-time

[Format]

| | | | | |
|---|---|---|---|---|
| ASCII | DLE | DC4 | *fn* | *m* |
| Hex | 10 | 14 | *fn* | *m* |
| Decimal | 16 | 20 | *fn* | *m* |

[Range]
*fn* = 7
*m* = 1, 3, 4

[Description]
- Transmit specified status or response in real-time.

| *m* | Function | Related command |
|---|---|---|
| 1 | Transmits basic ASB status | **GS a** |
| 3 | Transmits ink ASB status | **GS j** |
| 4 | Transmits offline response | **GS ( H** <Function 49> |

- The status or response format is the same as the format of the related command in the table above.
  See the description of the related command corresponding to *m.*

[Notes]
- Take the following into consideration:
  - If print data includes a character string matching this command, the printer performs the command. Users must consider this.
    For example: Graphic data might accidentally include a data string matching this command.
  - Do not embed this command within another command.
    For example: Graphic data might include this command.
- When this command is transmitted, the following data must not be transmitted until the status is received.
- This command is ignored when block data is transmitted.
- If the status is not received for 2 seconds (maximum period when operating the autocutter) and this state occurs several times, probably the printer power is not turned on or the interface cable is not connected.

## DLE DC4 *fn d1…d7* (*fn* = 8)

[Name] Clear buffer(s)

[Format]

| | | | | |
|---|---|---|---|---|
| ASCII | DLE | DC4 | *fn* | *d1…d7* |
| Hex | 10 | 14 | *fn* | *d1…d7* |
| Decimal | 16 | 20 | *fn* | *d1…d7* |

[Range] *fn* = 8
*d1* = 1, *d2* = 3, *d3* = 20, *d4* = 1, *d5* = 6, *d6* = 2, *d7* = 8

[Description]
- Clears all data stored in the receive buffer and the print buffer and transmits Clear-response25.
- If a recoverable error occurs, recovers from the error.

[Notes]
- This command must not be used in a system using this printer and the EPSON OPOS or JavaPOS driver.
- Take the following into consideration:
  - If print data includes a character string matching this command, the printer performs the command. Users must consider this.
    For example: Graphic data might accidentally include a data string matching this command.
  - Do not embed this command within another command.
    For example: Graphic data might include this command.
- When this command is transmitted, the following data must not be transmitted until the status is received.
- This command is ignored when block data is transmitted.

## ESC FF

[Name] Print data in page mode

[Format]

| | | |
|---|---|---|
| ASCII | ESC | FF |
| Hex | 1B | 0C |
| Decimal | 27 | 12 |

[Description]
- In page mode, prints all buffered data in the printing area collectively.

## ESC SP *n*

[Name] Set right-side character spacing

[Format]

| | | | |
|---|---|---|---|
| ASCII | ESC | SP | *n* |
| Hex | 1B | 20 | *n* |
| Decimal | 27 | 32 | *n* |

[Range] $0 \le n \le 255$

[Default] $n = 0$

[Description]
- Sets the character spacing for the right side of the character to [$n \times$ (horizontal or vertical motion unit)].

[Note]
- The maximum right-side character spacing is 35.983 mm {255/180"}.

## ESC ! *n*

[Name] Select print mode(s)

[Format]

| | | | |
|---|---|---|---|
| ASCII | ESC | ! | *n* |
| Hex | 1B | 21 | *n* |
| Decimal | 27 | 33 | *n* |

[Range] $0 \le n \le 255$

[Default] $n = 0$

[Description]
- Selects the character font and styles (emphasized, double-height, double-width, and underlined) together.

| (*n*) Bit | Off/On | Hex | Decimal | Function |
|---|---|---|---|---|
| 0 | Off | 00 | 0 | Character font A (12 × 24) selected. |
| | On | 01 | 1 | Character font B (9 × 17) selected. |
| 1, 2 | Off | 00 | 0 | Reserved. |
| 3 | Off | 00 | 0 | Emphasized mode not selected. |
| | On | 08 | 8 | Emphasized mode selected. |
| 4 | Off | 00 | 0 | Double-height mode not selected. |
| | On | 10 | 16 | Double-height mode selected. |
| 5 | Off | 00 | 0 | Double-width mode not selected. |
| | On | 20 | 32 | Double-width mode selected. |
| 6 | Off | 00 | 0 | Reserved. |
| 7 | Off | 00 | 0 | Underline mode not selected. |
| | On | 80 | 128 | Underline mode selected. |

## ESC $ *nL nH*

[Name] Set absolute print position

[Format]

| | | | | |
|---|---|---|---|---|
| ASCII | ESC | $ | *nL* | *nH* |
| Hex | 1B | 24 | *nL* | *nH* |
| Decimal | 27 | 36 | *nL* | *nH* |

[Range] $0 \le (n_L + n_H \times 256) \le 65535$ $(0 \le n_L \le 255, 0 \le n_H \le 255)$

[Description]
- Sets the next printing position to $[(n_L + n_H \times 256) \times$ (horizontal or vertical motion unit)] from the left edge of the printing area.

## ESC % *n*

[Name] Select/cancel user-defined character set

[Format]

| | | | |
|---|---|---|---|
| ASCII | ESC | % | *n* |
| Hex | 1B | 25 | *n* |
| Decimal | 27 | 37 | *n* |

[Range] $0 \le n \le 255$

[Default] $n = 0$

[Description]
- Selects or cancels the user-defined character set.
  - When the LSB of *n* is 0, the user-defined character set is canceled.
  - When the LSB of *n* is 1, the user-defined character set is selected.

[Note]
- This command is not effective for Extended font A.

## ESC & *y c1 c2 [x1 d1...d(y×x1)]...[xk d1...d(y×xk)]*

[Name] Define user-defined characters

[Format]

| | | | | | | |
|---|---|---|---|---|---|---|
| ASCII | ESC | & | *y* | *c1* | *c2* | *[x1 d1...d(y×x1)]...[xk d1...d(y×xk)]* |
| Hex | 1B | 26 | *y* | *c1* | *c2* | *[x1 d1...d(y×x1)]...[xk d1...d(y×xk)]* |
| Decimal | 27 | 38 | *y* | *c1* | *c2* | *[x1 d1...d(y×x1)]...[xk d1...d(y×xk)]* |

[Range]
$y = 3$
$32 \le c1 \le c2 \le 126$
$0 \le x \le 12$ (when Font A (12×24) is selected)
$0 \le x \le 9$ (when Font B (9×17) is selected)
$0 \le d \le 255$
$k = c2 - c1 + 1$

[Description]
- Assigns the user-defined character pattern for the specified character codes.
  - *y* specifies the number of bytes in the vertical direction.
  - *c1* specifies the beginning character code for the definition, and *c2* specifies the final code.
  - *x* specifies the number of dots in the horizontal direction.
  - *d* specifies the defined data (column format)

[Note]
- When Extended font A is selected, this command cannot be used.

## ESC ∗ *m nL nH d1...dk*

[Name] Select bit-image mode

[Format]

| | | | | | | |
|---|---|---|---|---|---|---|
| ASCII | ESC | ∗ | *m* | $n_L$ | $n_H$ | *d1...dk* |
| Hex | 1B | 2A | *m* | $n_L$ | $n_H$ | *d1...dk* |
| Decimal | 27 | 42 | *m* | $n_L$ | $n_H$ | *d1...dk* |

[Range]
$m = 0, 1, 32, 33$
$1 \le (n_L + n_H \times 256) \le 1023 \quad (0 \le n_L \le 255,\ 0 \le n_H \le 3)$
$0 \le d \le 255$
$k = n_L + n_H \times 256 \quad (\text{when } (m = 0,1))$
$k = (n_L + n_H \times 256) \times 3 \quad (\text{when } (m = 32,33))$

[Description]
- Stores the bit image data in *m* mode in the print buffer.

| *m* | Bit image mode | Vertical Dot Density | Horizontal Dot Density |
|---|---|---|---|
| 0 | 8-dot single-density | 60 dpi | 90 dpi |
| 1 | 8-dot double-density | 60 dpi | 180 dpi |
| 32 | 24-dot single-density | 180 dpi | 90 dpi |
| 33 | 24-dot double-density | 180 dpi | 180 dpi |

- $n_L$, $n_H$ specify the horizontal size as $(n_L + n_H \times 256)$ dots.
- *d* specifies the bit image data (column format).

## ESC – *n*

[Name] Turn underline mode on/off

[Format]

| | | | |
|---|---|---|---|
| ASCII | ESC | – | *n* |
| Hex | 1B | 2D | *n* |
| Decimal | 27 | 45 | *n* |

[Range] $0 \le n \le 2,\ 48 \le n \le 50$

[Default] $n = 0$

[Description]
- Turns underline mode on or off.

| *n* | Function |
|---|---|
| 0, 48 | Turns off underline mode. |
| 1, 49 | Turns on underline mode, set at 1-dot width. |
| 2, 50 | Turns on underline mode, set at 2-dot width. |

## ESC 2

| | | | |
|---|---|---|---|
| [Name] | Select default line spacing | | |
| [Format] | ASCII | ESC | 2 |
| | Hex | 1B | 32 |
| | Decimal | 27 | 50 |

[Description] • Sets the current line spacing to approximately 4.23 mm {1/6"}.

## ESC 3 *n*

| | | | | |
|---|---|---|---|---|
| [Name] | Set line spacing | | | |
| [Format] | ASCII | ESC | 3 | *n* |
| | Hex | 1B | 33 | *n* |
| | Decimal | 27 | 51 | *n* |

[Range] $0 \leq n \leq 255$

[Default] Equivalent to approximately 4.23 mm {1/6"}.

[Description] • Sets the current line spacing to [$n \times$ (vertical or horizontal motion unit)].

[Note] • The maximum is 1016 mm {40"}.

## ESC <

| | | | |
|---|---|---|---|
| [Name] | Return home | | |
| [Format] | ASCII | ESC | < |
| | Hex | 1B | 3C |
| | Decimal | 27 | 60 |

[Description] • Moves the print head to the standby position.

## ESC = *n*

[Name] Select peripheral device

[Format]

| | | | |
|---|---|---|---|
| ASCII | ESC | = | *n* |
| Hex | 1B | 3D | *n* |
| Decimal | 27 | 61 | *n* |

[Range] $1 \le n \le 3$

[Default: Serial interface model]

- When turning on the printer:

| Memory switch [Msw 1-6] status | *n* |
|---|---|
| Off | 1 |
| On | 2 |

- When executing **ESC** @:

| | | *n* | | |
|---|---|---|---|---|
| Setting before **ESC** @ processing | | 1 | 2 | 3 |
| After **ESC** @ Processing | Memory switch [Msw 1-6] is set to off | 1 | 2 | 1 |
| | Memory switch [Msw 1-6] is set to on | 1 | 2 | 2 |

[Default: Parallel interface model]

*n* = 1

[Description]

- Selects device to which the host computer transmits data.

| *n* | Function |
|---|---|
| 1 | Specifies printer only. |
| 2 | Specifies customer display only. |
| 3 | Specifies printer and customer display. |

- When the customer display only is selected, specified by (*n* =2), all data except this command and the real-time commands are ignored.

## ESC ? *n*

[Name] Cancel user-defined characters

[Format]

| | | | |
|---|---|---|---|
| ASCII | ESC | ? | *n* |
| Hex | 1B | 3F | *n* |
| Decimal | 27 | 63 | *n* |

[Range] $32 \le n \le 126$

[Description]

- Cancels the user-defined character pattern for the specified character codes.
- *n* specifies the character code for which the pattern defined is to be canceled.

[Note]

- When Extended font A is selected, this command cannot be used.

## ESC @

[Name] Initialize printer

[Format]

| | | |
|---|---|---|
| ASCII | ESC | @ |
| Hex | 1B | 40 |
| Decimal | 27 | 64 |

[Description]
- Clears the data in the print buffer and resets the printer modes to the modes that were in effect when the power was turned on.
  Keeps the following data:
  - ASB status bit assignment
  - Contents stored in the NV user memory
  - Contents defined for the NV graphics
  - Maintenance counter value
  - Offline response setting

## ESC D *n1...nk NUL*

[Name] Set horizontal tab positions

[Format]

| | | | | |
|---|---|---|---|---|
| ASCII | ESC | D | *n1...nk* | *NUL* |
| Hex | 1B | 44 | *n1...nk* | *00* |
| Decimal | 27 | 68 | *n1...nk* | *0* |

[Range] $1 \le n1 \le n2 \le ... \le nk \le 255$
$0 \le k \le 32$

[Default] $n$ = 8, 16, 24, 32, 40, ... , 232, 240, 248 (for font A in a standard character size width)

[Description]
- Sets horizontal tab positions.
  - $n$ specifies the number of digits from the setting position to the left edge of the printing area.
  - $k$ is used to indicate the number of bytes set for the horizontal tab position.

## ESC E *n*

[Name] Turn emphasized mode on/off

[Format]

| | | | |
|---|---|---|---|
| ASCII | ESC | E | *n* |
| Hex | 1B | 45 | *n* |
| Decimal | 27 | 69 | *n* |

[Range] $0 \le n \le 255$

[Default] $n = 0$

[Description]
- Turns emphasized mode on or off.
  - When the LSB of $n$ is 0, emphasized mode is turned off.
  - When the LSB of $n$ is 1, emphasized mode is turned on.

## ESC F *n*

[Name] Set/cancel cut sheet reverse eject

[Format]

| | | | |
|---|---|---|---|
| ASCII | ESC | F | *n* |
| Hex | 1B | 46 | *n* |
| Decimal | 27 | 70 | *n* |

[Range] $0 \le n \le 255$

[Default] $n = 0$

[Description]
- Sets or cancels slip reverse eject setting
  - When the LSB of *n* is 0, cancels slip reverse eject.
  - When the LSB of *n* is 1, sets slip reverse eject.

[Note]
- When printing or paper feeding is performed to a position exceeding 200 mm from the top of the paper, reverse eject must be prohibited.

## ESC G *n*

[Name] Turn double-strike mode on/off

[Format]

| | | | |
|---|---|---|---|
| ASCII | ESC | G | *n* |
| Hex | 1B | 47 | *n* |
| Decimal | 27 | 71 | *n* |

[Range] $0 \le n \le 255$

[Default] $n = 0$

[Description]
- Turns double-strike mode on or off.
  - When the LSB of *n* is 0, double-strike mode is turned off.
  - When the LSB of *n* is 1, double-strike mode is turned on.

## ESC J *n*

[Name] Print and feed paper

[Format]

| | | | |
|---|---|---|---|
| ASCII | ESC | J | *n* |
| Hex | 1B | 4A | *n* |
| Decimal | 27 | 74 | *n* |

[Range] $0 \le n \le 255$

[Description]
- Prints the data in the print buffer and feeds the paper [$n \times$ (vertical or horizontal motion unit)].

[Note]
- The maximum paper feed amount is approximately 1016 mm {40"}.

## ESC K *n*

[Name] Print and reverse feed

[Format]

| | | | |
|---|---|---|---|
| ASCII | ESC | K | *n* |
| Hex | 1B | 4B | *n* |
| Decimal | 27 | 75 | *n* |

[Range] $0 \le n \le 255$

[Description]
- Prints the data in the print buffer and feeds the paper [$n \times$ (vertical or horizontal motion unit)] in the reverse direction.

[Notes]
- The maximum paper feed amount is 1016 mm {40"}.
- When slip is selected as the active sheet, the printer processes this command immediately.
- Reverse paper feed exceeding 200 mm {7.9"} must be prohibited.

## ESC L

[Name] Select page mode

[Format]

| | | |
|---|---|---|
| ASCII | ESC | L |
| Hex | 1B | 4C |
| Decimal | 27 | 76 |

[Description]
- Switches from standard mode to page mode.

[Note]
- When page mode is selected, Extended font A cannot be used. If this command is executed when the extended font A is selected, font A is selected.

## ESC M *n*

[Name] Select character font

[Format]

| | | | |
|---|---|---|---|
| ASCII | ESC | M | *n* |
| Hex | 1B | 4D | *n* |
| Decimal | 27 | 77 | *n* |

[Range] *n* = 0, 1, 48, 49, 97 (in standard mode)
*n* = 0, 1, 48, 49 (in page mode)

[Default] *n* = 0

[Description]
- Selects character font.

| *n* | Function |
|---|---|
| 0, 48 | Character font A selected. |
| 1, 49 | Character font B selected. |
| 97 | Extended font A selected. |

[Notes]
- When the extended font A is selected, the setting values of the following commands are not affected.
  - **ESC !**, **ESC –**, **ESC E**, **ESC G**, **GS !**, **ESC ( N** <Function 48,49,50>, **GS B**

## ESC R *n*

[Name] Select an international character set

[Format]

| | | | |
|---|---|---|---|
| ASCII | ESC | R | *n* |
| Hex | 1B | 52 | *n* |
| Decimal | 27 | 82 | *n* |

[Range] $0 \le n \le 13$

[Default] $n = 0$

[Description] • Selects international character set.

| *n* | Character set |
|---|---|
| 0 | U.S.A. |
| 1 | France |
| 2 | Germany |
| 3 | U.K. |
| 4 | Denmark I |
| 5 | Sweden |
| 6 | Italy |
| 7 | Spain I |
| 8 | Japan |
| 9 | Norway |
| 10 | Denmark II |
| 11 | Spain II |
| 12 | Latin America |
| 13 | Korea |

## ESC S

[Name] Select standard mode

[Format]

| | | |
|---|---|---|
| ASCII | ESC | S |
| Hex | 1B | 53 |
| Decimal | 27 | 83 |

[Description] • Switches from page mode to standard mode.

## ESC T *n*

[Name] Select print direction in page mode

[Format]

| | | | |
|---|---|---|---|
| ASCII | ESC | T | *n* |
| Hex | 1B | 54 | *n* |
| Decimal | 27 | 84 | *n* |

[Range] $0 \le n \le 3$, $48 \le n \le 51$

[Default] $n = 0$

[Description]
- Selects the print direction and starting position in page mode.

| *n* | Print Direction | Starting Position |
|---|---|---|
| 0, 48 | Left to right | Upper left |
| 1, 49 | Bottom to top | Lower left |
| 2, 50 | Right to left | Lower right |
| 3, 51 | Top to bottom | Upper right |

## ESC U *n*

[Name] Turn unidirectional printing mode on/off

[Format]

| | | | |
|---|---|---|---|
| ASCII | ESC | U | *n* |
| Hex | 1B | 55 | *n* |
| Decimal | 27 | 85 | *n* |

[Range] $0 \le n \le 255$

[Default] $n = 0$

[Description]
- Turns unidirectional printing mode on or off.
  - When the LSB of *n* is 0, turns off unidirectional printing mode.
  - When the LSB of *n* is 1, turns on unidirectional printing mode.

[Notes]
- Bar code printing or two-dimensional code printing is performed with one directional print, regardless of the settings with this command.
- In page mode, if multiple types of print modes are mixed, such as bar codes, two-dimensional codes, or others, the printer prints the bar code, or two-dimensional code with one directional print regardless of the setting of this command.

## ESC W *xL xH yL yH dxL dxH dyL dyH*

[Name] Set printing area in page mode

[Format]

| | | | | | | | | | | |
|---|---|---|---|---|---|---|---|---|---|---|
| ASCII | ESC | W | *xL* | *xH* | *yL* | *yH* | *dxL* | *dxH* | *dyL* | *dyH* |
| Hex | 1B | 57 | *xL* | *xH* | *yL* | *yH* | *dxL* | *dxH* | *dyL* | *dyH* |
| Decimal | 27 | 87 | *xL* | *xH* | *yL* | *yH* | *dxL* | *dxH* | *dyL* | *dyH* |

[Range]
$0 \le (xL + xH \times 256) \le 65535$ $(0 \le xL \le 255, 0 \le xH \le 255)$
$0 \le (yL + yH \times 256) \le 65535$ $(0 \le yL \le 255, 0 \le yH \le 255)$
$1 \le (dxL + dxH \times 256) \le 65535$ $(0 \le dxL \le 255, 0 \le dxH \le 255)$
$1 \le (dyL + dyH \times 256) \le 65535$ $(0 \le dyL \le 255, 0 \le dyH \le 255)$

[Default: For TM-J7600]
$(xL + xH \times 256) = 0$ $(xL = 0, yH = 0)$ [Paper roll / slip]
$(yL + yH \times 256) = 0$ $(yL = 0, yH = 0)$
$(dxL + dxH \times 256) = 360$ $(dxL = 104, dxH = 1)$ [Roll paper: paper width 57.5 mm]
$(dyL + dyH \times 256) = 584$ $(dyL = 72, dyH = 2)$
$(dxL + dxH \times 256) = 432$ $(dxL = 176, dxH = 1)$ [Roll paper: paper width 69.5 mm]
$(dyL + dyH \times 256) = 488$ $(dyL = 232, dyH = 1)$
$(dxL + dxH \times 256) = 480$ $(dxL = 224, dxH = 1)$ [Roll paper: paper width 76 mm]
$(dyL + dyH \times 256) = 440$ $(dyL = 184, dyH = 1)$
$(dxL + dxH \times 256) = 512$ $(dxL = 0, dxH = 2)$ [Roll paper: paper width 82.5 mm]
$(dyL + dyH \times 256) = 416$ $(dyL = 160, dyH = 1)$
$(dxL + dxH \times 256) = 960$ $(dxL = 192, dxH = 3)$ [Slip]
$(dyL + dyH \times 256) = 216$ $(dyL = 216, dyH = 0)$

[Default: For TM-J7500]
$(xL + xH \times 256) = 0$ $(xL = 0, yH = 0)$ [Paper roll / slip]
$(yL + yH \times 256) = 0$ $(yL = 0, yH = 0)$
$(dxL + dxH \times 256) = 360$ $(dxL = 104, dxH = 1)$ [Roll paper: paper width 57.5 mm]
$(dyL + dyH \times 256) = 1176$ $(dyL = 152, dyH = 4)$
$(dxL + dxH \times 256) = 432$ $(dxL = 176, dxH = 1)$ [Roll paper: paper width 69.5 mm]
$(dyL + dyH \times 256) = 984$ $(dyL = 216, dyH = 3)$
$(dxL + dxH \times 256) = 480$ $(dxL = 224, dxH = 1)$ [Roll paper: paper width 76 mm]
$(dyL + dyH \times 256) = 880$ $(dyL = 112, dyH = 3)$
$(dxL + dxH \times 256) = 512$ $(dxL = 0, dxH = 2)$ [Roll paper: paper width 82.5 mm]
$(dyL + dyH \times 256) = 832$ $(dyL = 64, dyH = 3)$
$(dxL + dxH \times 256) = 960$ $(dxL = 192, dxH = 3)$ [Slip]
$(dyL + dyH \times 256) = 440$ $(dyL = 184, dyH = 1)$

[Description]
- Sets the size and the logical origin of the printing area in page mode.
  - *xL*, *xH* specify the horizontal logical origin as $[(xL + xH \times 256) \times$ (horizontal motion unit)].
  - *yL*, *yH* specify the vertical logical origin as $[(yL + yH \times 256) \times$ (vertical motion unit)].
  - *dxL, dxH* specify the horizontal size of printing area as $[(dxL + dxH \times 256) \times$ (horizontal motion unit)].
  - *dyL*, *dyH* specify the vertical printing area size as $[(dyL + dyH \times 256) \times$ (vertical motion unit)].

## ESC \ *nL nH*

[Name] Set relative print position

[Format]

| | | | | |
|---|---|---|---|---|
| ASCII | ESC | \ | *nL* | *nH* |
| Hex | 1B | 5C | *nL* | *nH* |
| Decimal | 27 | 92 | *nL* | *nH* |

[Range] $-32768 \le (nL + nH \times 256) \le 32767$

[Description]
- Sets the next printing position to [($nL + nH \times 256$) × (vertical or horizontal motion unit)] from the current position.
- A positive number specifies movement to the right, and a negative number specifies movement to the left.

## ESC a *n*

[Name] Select justification

[Format]

| | | | |
|---|---|---|---|
| ASCII | ESC | a | *n* |
| Hex | 1B | 61 | *n* |
| Decimal | 27 | 97 | *n* |

[Range] $0 \le n \le 2$, $48 \le n \le 50$

[Default] $n = 0$

[Description]
- In standard mode, aligns all the data in one line to the position.

| *n* | Justification |
|---|---|
| 0, 48 | Left justification |
| 1, 49 | Centering |
| 2, 50 | Right justification |

## ESC c 0 *n*

[Name] Select paper type(s) for printing

[Format]

| | | | | |
|---|---|---|---|---|
| ASCII | ESC | c | 0 | *n* |
| Hex | 1B | 63 | 30 | *n* |
| Decimal | 27 | 99 | 48 | *n* |

[Range] $1 \le n \le 4$

[Default] $n = 3$

[Description] • Selects the active sheet(s) for printing.

| (*n*) Bit | Off/On | Hex | Decimal | Function |
|---|---|---|---|---|
| 0 | Off | 00 | 0 | Roll paper disabled. |
| | On | 01 | 1 | Roll paper enabled. |
| 1 | Off | 00 | 0 | Roll paper disabled. |
| | On | 02 | 2 | Roll paper enabled. |
| 2 | Off | 00 | 0 | Slip paper disabled. |
| | On | 04 | 4 | Slip paper enabled. |
| 3 ~ 7 | Off | 00 | 0 | Reserved. |

## ESC c 1 *n*

[Name] Select paper type(s) for command settings

[Format]

| | | | | |
|---|---|---|---|---|
| ASCII | ESC | c | 1 | *n* |
| Hex | 1B | 63 | 31 | *n* |
| Decimal | 27 | 99 | 49 | *n* |

[Range] $1 \le n \le 7$

[Default] $n = 7$

[Description] • Selects the paper type(s) for command settings.

| (*n*) Bit | Off/On | Hex | Decimal | Function |
|---|---|---|---|---|
| 0 | Off | 00 | 0 | Roll paper disabled. |
| | On | 01 | 1 | Roll paper enabled. |
| 1 | Off | 00 | 0 | Roll paper disabled. |
| | On | 02 | 2 | Roll paper enabled. |
| 2 | Off | 00 | 0 | Slip paper disabled. |
| | On | 04 | 4 | Slip paper enabled. |
| 3 ~ 7 | Off | 00 | 0 | Reserved. |

[Note] • This command affects the **ESC 2**, **ESC 3**, **GS (K**, **GS L**, and **GS W** commands.

## ESC c 3 *n*

[Name] Select paper sensor(s) to output paper-end signals

[Format]

| | | | | |
|---|---|---|---|---|
| ASCII | ESC | c | 3 | *n* |
| Hex | 1B | 63 | 33 | *n* |
| Decimal | 27 | 99 | 51 | *n* |

[Range] $0 \le n \le 255$

[Default] $n = 0$

[Description] • Selects the paper sensor(s) to output paper end signals when a paper end is detected.

| (*n*) Bit | Off/On | Hex | Decimal | Function |
|---|---|---|---|---|
| 0 | Off | 00 | 0 | Roll paper near-end sensor disabled. |
| | On | 01 | 1 | Roll paper near-end sensor enabled. |
| 1 | Off | 00 | 0 | Roll paper near-end sensor disabled. |
| | On | 02 | 2 | Roll paper near-end sensor enabled. |
| 2 | Off | 00 | 0 | Roll paper end sensor disabled. |
| | On | 04 | 4 | Roll paper end sensor enabled. |
| 3 | Off | 00 | 0 | Roll paper end sensor disabled. |
| | On | 08 | 8 | Roll paper end sensor enabled. |
| 4 | Off | 00 | 0 | TOF sensor disabled. |
| | On | 10 | 16 | TOF sensor enabled. |
| 5 | Off | 00 | 0 | BOF sensor disabled. |
| | On | 20 | 32 | BOF sensor enabled. |
| 6, 7 | Off | 00 | 0 | Reserved. |

[Note] • This command is enabled only with a parallel interface.

## ESC c 4 *n*

[Name] Select paper sensor(s) to stop printing

[Format]

| | | | | |
|---|---|---|---|---|
| ASCII | ESC | c | 4 | *n* |
| Hex | 1B | 63 | 34 | *n* |
| Decimal | 27 | 99 | 52 | *n* |

[Range] $0 \le n \le 255$

[Default] $n = 0$

[Description] • Selects the paper sensor(s) to use to stop printing when a paper end is detected.

| (*n*) Bit | Off/On | Hex | Decimal | Function |
|---|---|---|---|---|
| 0 | Off | 00 | 0 | Roll paper near-end sensor disabled. |
| | On | 01 | 1 | Roll paper near-end sensor enabled. |
| 1 | Off | 00 | 0 | Roll paper near-end sensor disabled. |
| | On | 02 | 2 | Roll paper near-end sensor enabled. |
| 2 ~ 7 | Off | 00 | 0 | Reserved. |

## ESC c 5 *n*

[Name] Enable/disable panel buttons

[Format]

| | | | | |
|---|---|---|---|---|
| ASCII | ESC | c | 5 | *n* |
| Hex | 1B | 63 | 35 | *n* |
| Decimal | 27 | 99 | 53 | *n* |

[Range] $0 \le n \le 255$

[Default] $n = 0$

[Description] • Enables or disables the panel buttons.
- When the LSB of *n* is 0, the panel buttons are enabled.
- When the LSB of *n* is 1, the panel buttons are disabled.

## ESC d *n*

[Name] Print and feed *n* lines

[Format]

| | | | |
|---|---|---|---|
| ASCII | ESC | d | *n* |
| Hex | 1B | 64 | *n* |
| Decimal | 27 | 100 | *n* |

[Range] $0 \le n \le 255$

[Description]
- Prints the data in the print buffer and feeds the paper [$n \times$ (current line spacing)].

[Note]
- The maximum paper feed amount is 1016 mm {40"}.

## ESC e *n*

[Name] Print and reverse feed *n* lines

[Format]

| | | | |
|---|---|---|---|
| ASCII | ESC | e | *n* |
| Hex | 1B | 65 | *n* |
| Decimal | 27 | 101 | *n* |

[Range] $0 \le n \le 255$

[Description]
- Prints the data in the print buffer and feeds the paper [$n \times$ (current line spacing)] in the reverse direction.

[Notes]
- The maximum paper feed amount is 1016 mm {40"}.
- When slip is selected as the active sheet, the printer processes this command.
- Reverse paper feed exceeding 200 mm {7.9"} must be prohibited.

## ESC f *t1 t2*

[Name] Set cut sheet wait time

[Format]

| | | | | |
|---|---|---|---|---|
| ASCII | ESC | f | *t1* | *t2* |
| Hex | 1B | 66 | *t1* | *t2* |
| Decimal | 27 | 102 | *t1* | *t2* |

[Range] $0 \le t1 \le 15$
$0 \le t2 \le 64$

[Default] $t1 = 0$, $t2 = 2$

[Description]
- Sets the time that the printer waits for cut sheet to be inserted and the time from insertion of the cut sheet to the start of printing.
  - *t1* specifies the wait time for cut sheet to be inserted as [$t1 \times 1$] minutes. When *t1* is set to 0, the printer cancels the setting of the wait time. In this case, the waiting time to insert a sheet is set to “infinite.”
  - *t2* specifies the time from insertion of the cut sheet to the start of printing as [$t2 \times 0.1$] seconds.

## ESC p *m t1 t2*

[Name] Generate pulse

[Format]

| | | | | | |
|---|---|---|---|---|---|
| ASCII | ESC | p | *m* | *t1* | *t2* |
| Hex | 1B | 70 | *m* | *t1* | *t2* |
| Decimal | 27 | 112 | *m* | *t1* | *t2* |

[Range] $m = 0, 1, 48, 49$
$0 \leq t1 \leq 255$
$0 \leq t2 \leq 255$

[Description]
- Outputs the pulse specified by *t1* and *t2* to connector pin *m*.

| *m* | Connector pin |
|---|---|
| 0, 48 | Drawer kick out connector pin 2. |
| 1, 49 | Drawer kick out connector pin 5. |

- *t1* specifies the pulse on time as [$t1 \times 2$ ms].
- *t2* specifies the pulse off time as [$t2 \times 2$ ms].

[Note]
- Specify a value so that the off time is longer than the on time ($t1 < t2$).

## ESC q

[Name] Release paper

[Format]

| | | |
|---|---|---|
| ASCII | ESC | q |
| Hex | 1B | 71 |
| Decimal | 27 | 113 |

[Description]
- Releases the cut sheet.

## ESC t *n*

[Name] Select character code table

[Format]

| | | | |
|---|---|---|---|
| ASCII | ESC | t | *n* |
| Hex | 1B | 74 | *n* |
| Decimal | 27 | 116 | *n* |

[Range] $0 \le n \le 5$, $16 \le n \le 19$, $n = 255$

[Default] $n = 0$

[Description]
- Selects a page *n* from the character code table.

| *n* | Character code table |
|---|---|
| 0 | Page 0 [PC437 (USA: Standard Europe)] |
| 1 | Page 1 [Katakana] |
| 2 | Page 2 [PC850 (Multilingual)] |
| 3 | Page 3 [PC860 (Portuguese)] |
| 4 | Page 4 [PC863 (Canadian-French) |
| 5 | Page 5 [PC865 (Nordic)] |
| 16 | Page 16 [WPC1252] |
| 17 | Page 17 [PC866 (Cyrillic #2)] |
| 18 | Page 18 [PC852 (Latin 2)] |
| 19 | Page 19 [PC858 (Euro)] |
| 255 | Page 255 [User-defined page] |

## ESC { *n*

[Name] Turn upside-down printing mode on/off

[Format]

| | | | |
|---|---|---|---|
| ASCII | ESC | { | *n* |
| Hex | 1B | 7B | *n* |
| Decimal | 27 | 123 | *n* |

[Range] $0 \le n \le 255$

[Default] $n = 0$

[Description]
- In standard mode, turns upside-down printing mode on or off.
  - When the LSB of *n* is 0, upside-down printing mode is turned off.
  - When the LSB of *n* is 1, upside-down printing mode is turned on.

## GS ! *n*

[Name] Select character size

[Format]

| | | | |
|---|---|---|---|
| ASCII | GS | ! | *n* |
| Hex | 1D | 21 | *n* |
| Decimal | 29 | 33 | *n* |

[Range] $0 \le n \le 7$, $16 \le n \le 23$, $32 \le n \le 39$, $48 \le n \le 55$, $64 \le n \le 71$,
$80 \le n \le 87$, $96 \le n \le 103$, $112 \le n \le 119$
($1 \le$ Enlargement in vertical direction $\le 8$, $1 \le$ Enlargement in horizontal direction $\le 8$)

[Default] $n = 0$

[Description] • Selects character size (enlargement in vertical and horizontal directions) .

| (*n*) Bit | Off/On | Hex | Decimal | Function |
|---|---|---|---|---|
| 0 ~ 2 | Refer to Table 2 [Enlarged in vertical direction] | | | Specifies the times enlarged in the vertical direction |
| 3 | Off | 00 | 0 | Reserved. |
| 4 ~ 6 | Refer to Table 1 [Enlarged in horizontal direction] | | | Specifies the times enlarged in the horizontal direction |
| 7 | Off | 00 | 0 | Reserved. |

Table 1 [Enlarged in horizontal direction]

| Hex | Decimal | Enlargement |
|---|---|---|
| 00 | 0 | 1 time (standard) |
| 10 | 16 | 2 times |
| 20 | 32 | 3 times |
| 30 | 48 | 4 times |
| 40 | 64 | 5 times |
| 50 | 80 | 6 times |
| 60 | 96 | 7 times |
| 70 | 112 | 8 times |

Table 2 [Enlarged in vertical direction]

| Hex | Decimal | Enlargement |
|---|---|---|
| 00 | 0 | 1 time (standard) |
| 01 | 1 | 2 times |
| 02 | 2 | 3 times |
| 03 | 3 | 4 times |
| 04 | 4 | 5 times |
| 05 | 5 | 6 times |
| 06 | 6 | 7 times |
| 07 | 7 | 8 times |

## GS $ *nL nH*

[Name] Set absolute vertical print position in page mode

[Format]

| | | | | |
|---|---|---|---|---|
| ASCII | GS | $ | *nL* | *nH* |
| Hex | 1D | 24 | *nL* | *nH* |
| Decimal | 29 | 36 | *nL* | *nH* |

[Range] $0 \le (nL + nH \times 256) \le 65535$ $(0 \le nL \le 255,\ 0 \le nH \le 255)$

[Description]
- In page mode, sets the next printing position to [$(nL + nH \times 256) \times$ (vertical or horizontal motion unit)] from the starting position set by **ESC T**.

## GS ( A *pL pH n m*

[Name] Execute test print

[Format]

| | | | | | | | |
|---|---|---|---|---|---|---|---|
| ASCII | GS | ( | A | *pL* | *pH* | *n* | *m* |
| Hex | 1D | 28 | 41 | *pL* | *pH* | *n* | *m* |
| Decimal | 29 | 40 | 65 | *pL* | *pH* | *n* | *m* |

[Range] $(pL + pH \times 256) = 2$ $(pL = 2, pH = 0)$
$0 \le n \le 4,\ 48 \le n \le 52$
$1 \le m \le 3,\ 49 \le m \le 51$ (when $(0 \le n \le 2,\ 48 \le n \le 50)$)
$m = 2, 3, 50, 51$ (when $(n = 3,4,51,52)$)

[Description]
- Executes a specified test print.
  - *pL, pH* specify $(pL + pH \times 256)$ the number of bytes after *n* and *m.*
  - *n* specifies paper used for the test print.

| *n* | Paper source |
|---|---|
| 0, 48 | Basic sheet (roll paper) |
| 1, 49<br>2, 50 | Roll paper |
| 3, 51<br>4, 52 | Slip paper |

  - *m* specifies a test pattern.

| *m* | Test pattern |
|---|---|
| 1, 49 | Hexadecimal dump |
| 2, 50 | Printer status print |
| 3, 51 | Rolling pattern print |

[Notes]
- The printer executes a software reset after processing this command.
  - Clears the receive and print buffers.
  - Resets all settings value in the RAM (the printing area, the print styles, user-defined characters, and others) that was in effect at power on. (The data in the NV-memory are not reset.)

## GS ( B *pL pH m [a1 b1]...[ak bk]*

[Name] Customize ASB status bits

[Format]

| | | | | | | | |
|---|---|---|---|---|---|---|---|
| ASCII | GS | ( | B | *pL* | *pH* | *m* | *[a1 b1]...[ak bk]* |
| Hex | 1D | 28 | 42 | *pL* | *pH* | *m* | *[a1 b1]...[ak bk]* |
| Decimal | 29 | 40 | 66 | *pL* | *pH* | *m* | *[a1 b1]...[ak bk]* |

[Range]
($pL + pH \times 256$) = 2, 3, 5 ($pL$ = 2,3,5, $pH$ = 0)
$m$ = 97
$a$ = 0, 49, 51
$b$ = 44 (when ($a$ = 49))
$b$ = 45 (when ($a$ = 51))

[Description]
- Changes the bit assignments of the basic ASB status bit specified with the **GS a** command (bit customization).
  - $pL$, $pH$ specify ($pL + pH \times 256$) for the number of bytes after $pH$ ($m$ and *[a1 b1]...[ak bk]*).
  - $a$ specifies the bit of the ASB to be customized.
  - $b$ specifies the ASB status.

| *a* | *b* | Function | |
|---|---|---|---|
| | | Bit of ASB status | ASB status to be assigned |
| 0 | -- | Cancels the setting of bit assignment | --- |
| 49 | 44 | Bit 1 of the third byte | Cut sheet insertion waiting status |
| 51 | 45 | Bit 3 of the third byte | Cut sheet removal waiting status |

## GS ( C *pL pH m fn b [c1 c2] [d1...dk]*

[Name] Edit NV user memory

[Description]
- Edits data in the NV user memory. .
  - *pL*, *pH* specify (*pL* + *pH* × 256) the number of bytes after *pH* (*m, fn, b, [c1 c2],* and *[d1...dk]* ).
  - *fn* specifies the function.
  - *c1*, *c2* specify the key code (which identifies the record).
  - *[d1...dk]* specify the process of each function.

| *fn* | Format | Function No. | Function |
|---|---|---|---|
| 0, 48 | **GS ( C *pL pH m fn b c1 c2*** | 0 | Deletes the specified record. |
| 1, 49 | **GS ( C *pL pH m fn b c1 c2 d1...dk*** | 1 | Stores data in the specified record. |
| 2, 50 | **GS ( C *pL pH m fn b c1 c2*** | 2 | Transmits the data in the specified record. |
| 3, 51 | **GS ( C *pL pH m fn b*** | 3 | Transmits the number of bytes of memory used. |
| 4, 52 | **GS ( C *pL pH m fn b*** | 4 | Transmits the number of bytes of remaining memory (unused area). |
| 5, 53 | **GS ( C *pL pH m fn b*** | 5 | Transmits the key code list. |
| 6, 54 | **GS ( C *pL pH m fn b d1 d2 d3*** | 6 | Deletes all data in the NV user memory. |

[Notes]
- Frequent write command executions by an NV memory write command may damage the NV memory. Therefore, it is recommended to write to the NV memory not more than 10 times a day.
- While processing this command, the printer is BUSY while writing data to the NV memory and stops receiving data. Therefore, be sure not to transmit data including the real-time commands during the execution of this command.
- When <Function 2, 3, 4, or 5> is transmitted, the following data must not be transmitted until the status is received. And it will be necessary to perform the ESC/POS Handshaking Protocol procedures when using <Function 2 and 5>.

## <Function 0> **GS ( C *pL pH m fn b c1 c2*** (*fn* = 0, 48)

[Format]

| | | | | | | | | | | |
|---|---|---|---|---|---|---|---|---|---|---|
| ASCII | GS | ( | C | *pL* | *pH* | *m* | *fn* | *b* | *c1* | *c2* |
| Hex | 1D | 28 | 43 | *pL* | *pH* | *m* | *fn* | *b* | *c1* | *c2* |
| Decimal | 29 | 40 | 67 | *pL* | *pH* | *m* | *fn* | *b* | *c1* | *c2* |

[Range]
$(pL + pH \times 256) = 5$ $(pL = 5, pH = 0)$
$m = 0$
$fn = 0, 48$
$b = 0$
$32 \le c1 \le 126$
$32 \le c2 \le 126$

[Description]
- Deletes the record specified by the key codes (*c1*, *c2*) in the NV user memory.

## <Function 1> **GS ( C *pL pH m fn b c1 c2 d1...dk*** (*fn* = 1, 49)

[Format]

| | | | | | | | | | | | |
|---|---|---|---|---|---|---|---|---|---|---|---|
| ASCII | GS | ( | C | *pL* | *pH* | *m* | *fn* | *b* | *c1* | *c2* | *d1...dk* |
| Hex | 1D | 28 | 43 | *pL* | *pH* | *m* | *fn* | *b* | *c1* | *c2* | *d1...dk* |
| Decimal | 29 | 40 | 67 | *pL* | *pH* | *m* | *fn* | *b* | *c1* | *c2* | *d1...dk* |

[Range]
$6 \le (pL + pH \times 256) \le 65535$ $(0 \le pL \le 255, 0 \le pH \le 255)$
$m = 0$
$fn = 1, 49$
$b = 0$
$32 \le c1 \le 126$
$32 \le c2 \le 126$
$32 \le d \le 254$
$k = (pL + pH \times 256) - 5$

[Description]
- Stores the data (*d1...dk*) as the record specified by the key codes (*c1*, *c2*) in the NV user memory.
  - *[d1...dk]* specify the stored data (contents of the record).

## <Function 2> **GS ( C *pL pH m fn b c1 c2*** (*fn* = 2, 50)

[Format]

| | | | | | | | | | | |
|---|---|---|---|---|---|---|---|---|---|---|
| ASCII | GS | ( | C | *pL* | *pH* | *m* | *fn* | *b* | *c1* | *c2* |
| Hex | 1D | 28 | 43 | *pL* | *pH* | *m* | *fn* | *b* | *c1* | *c2* |
| Decimal | 29 | 40 | 67 | *pL* | *pH* | *m* | *fn* | *b* | *c1* | *c2* |

[Range]
$(pL + pH \times 256) = 5$ $(pL = 5, pH = 0)$
$m = 0$
$fn = 2, 50$
$b = 0$
$32 \le c1 \le 126$
$32 \le c2 \le 126$

[Description]
- Transmits data for the record specified by the key codes (*c1*, *c2*) in the NV user memory.

### <Function 3> **GS ( C *pL pH m fn b*** (*fn* = 3, 51)

[Format]

| | | | | | | | | |
|---|---|---|---|---|---|---|---|---|
| ASCII | GS | ( | C | *pL* | *pH* | *m* | *fn* | *b* |
| Hex | 1D | 28 | 43 | *pL* | *pH* | *m* | *fn* | *b* |
| Decimal | 29 | 40 | 67 | *pL* | *pH* | *m* | *fn* | *b* |

[Range]
($pL + pH \times 256$) = 3 ($pL$ = 3, $pH$ = 0)
$m$ = 0
$fn$ = 3, 51
$b$ = 0

[Description]
- Transmits the number of bytes of memory used in the NV user memory.

### <Function 4> **GS ( C *pL pH m fn b*** (*fn* = 4, 52)

[Format]

| | | | | | | | | |
|---|---|---|---|---|---|---|---|---|
| ASCII | GS | ( | C | *pL* | *pH* | *m* | *fn* | *b* |
| Hex | 1D | 28 | 43 | *pL* | *pH* | *m* | *fn* | *b* |
| Decimal | 29 | 40 | 67 | *pL* | *pH* | *m* | *fn* | *b* |

[Range]
($pL + pH \times 256$) = 3 ($pL$ = 3, $pH$ = 0)
$m$ = 0
$fn$ = 4, 52
$b$ = 0

[Description]
- Transmits the number of bytes of remaining memory (unused area) in the NV user memory.

### <Function 5> **GS ( C *pL pH m fn b*** (*fn* = 5, 53)

[Format]

| | | | | | | | | |
|---|---|---|---|---|---|---|---|---|
| ASCII | GS | ( | C | *pL* | *pH* | *m* | *fn* | *b* |
| Hex | 1D | 28 | 43 | *pL* | *pH* | *m* | *fn* | *b* |
| Decimal | 29 | 40 | 67 | *pL* | *pH* | *m* | *fn* | *b* |

[Range]
($pL + pH \times 256$) = 3 ($pL$ = 3 , $pH$ = 0)
$m$ = 0
$fn$ = 5, 53
$b$ = 0

[Description]
- Transmits the key code list in the NV user memory.

### <Function 6> **GS ( C *pL pH m fn b d1 d2 d3*** (*fn* = 6, 54)

[Format]

| | | | | | | | | | | | | |
|---|---|---|---|---|---|---|---|---|---|---|---|---|
| ASCII | GS | ( | C | *pL* | *pH* | *m* | *fn* | *b* | *d1* | *d2* | *d3* |
| Hex | 1D | 28 | 43 | *pL* | *pH* | *m* | *fn* | *b* | *d1* | *d2* | *d3* |
| Decimal | 29 | 40 | 67 | *pL* | *pH* | *m* | *fn* | *b* | *d1* | *d2* | *d3* |

[Range]
($pL + pH \times 256$) = 6 ($pL$ = 6, $pH$ = 0)
$m$ = 0
$fn$ = 6, 54
$b$ = 0
$d1$ = 67
$d2$ = 76
$d3$ = 82

[Description]
- Deletes all data in the NV user memory.

## GS ( D *pL pH m [a1 b1]...[ak bk]*

[Name] Enable/disable real-time command

[Format]

| | | | | | | | |
|---|---|---|---|---|---|---|---|
| ASCII | GS | ( | D | *pL* | *pH* | *m* | *[a1 b1]...[ak bk]* |
| Hex | 1D | 28 | 44 | *pL* | *pH* | *m* | *[a1 b1]...[ak bk]* |
| Decimal | 29 | 40 | 68 | *pL* | *pH* | *m* | *[a1 b1]...[ak bk]* |

[Range] $3 \le (pL + pH \times 256) \le 65535$ $(0 \le pL \le 255,\ 0 \le pH \le 255)$
$m = 20$
$a = 1,2$
$b = 0,1,48,49$

[Default]

| *a* | Type(s) of real-time commands | Default |
|---|---|---|
| 1 | **DLE DC4 *fn m t*** (*fn* = 1): Generate pulse in real-time | Enabled (*b* = 1) |
| 2 | **DLE DC4 *fn a b*** (*fn* = 2): Execute power-off sequence | Disabled (*b* = 0) |

[Description]
- Enables or disables the following real-time commands.
  - *pL*, *pH* specify (*pL*+ *pH* × 256) as the number of bytes after *pH* (*m* and *[a1 b1]...[ak bk]*).
  - *a* specifies the type of real-time command.
  - *b* specifies enable or disable of real-time command processing.

| *a* | *b* | Function |
|---|---|---|
| 1 | 0, 48 | **DLE DC4 *fn m t*** (*fn* = 1): Not processed (disabled) |
| | 1, 49 | **DLE DC4 *fn m t*** (*fn* = 1): Processed (enabled) |
| 2 | 0, 48 | **DLE DC4 *fn a b*** (*fn* = 2): Not processed (disabled) |
| | 1, 49 | **DLE DC4 *fn a b*** (*fn* = 2): Processed (enabled) |

[Note]
- If bit image data accidentally includes a character string with this command, it is recommended to use this command in advance to disable the real-time commands.

## GS ( E *pL pH fn [parameters]*

[Name] Set user setup commands

[Description]
- Controls the user setting modes.
  - *pL, pH* specify (*pL* + *pH* ×256) as the number of bytes after *pH* (*fn* and *[parameters]*).
  - *fn* specifies the function.
  - *[parameters]* specify the process of each function.

| *fn* | Format | Function No. | Function |
|---|---|---|---|
| 1 | **GS ( E *pL pH fn d1 d2*** | 1 | Changes into the user setting mode. |
| 2 | **GS ( E *pL pH fn d1 d2 d3*** | 2 | Ends the user setting mode session. (Performs a soft reset.) |
| 3 | **GS ( E *pL pH fn [a1 b18...b11] ... [ak bk8....bk1]*** | 3 | Changes the memory switch. |
| 4 | **GS ( E *pL pH fn a*** | 4 | Transmits the settings of the memory switch. |
| 5 | **GS ( E *pL pH fn [a1 n1L n1H] ... [ak nkL nkH]*** | 5 | Sets the customized setting values. |
| 6 | **GS ( E *pL pH fn a*** | 6 | Transmits the customized setting values. |
| 7 | **GS ( E *pL pH fn a d1 d2*** | 7 | Copies the user-defined page. |
| 8 | **GS ( E *pL pH fn y c1 c2 [x d1...d(y × x)]k*** | 8 | Defines the data (column format) for the character code page in the work area. |
| 9 | **GS ( E *pL pH fn x c1 c2 [y d1...d(y × x)]k*** | 9 | Defines the data (raster format) for the character code page in the work area. |
| 10 | **GS ( E *pL pH fn c1 c2*** | 10 | Deletes the data for the character code page in the work area. |
| 11 | **GS ( E *pL pH fn a d1...dk*** | 11 | Sets the communication conditions for the serial interface. |
| 12 | **GS ( E *pL pH fn a*** | 12 | Transmits the communication conditions for the serial interface. |

[Notes]
- Frequent write command executions by an NV memory write command may damage the NV memory. Therefore, it is recommended to write to NV memory not more than ten times a day.
- While processing this command, the printer is BUSY while writing data to the NV memory and stops receiving data. Therefore, be sure not to transmit data, including the real-time commands, during the execution of this command.
- When <Function 1, 4, 6, and 12> is transmitted, the following data must not be transmitted until the status is received.

## <Function 1> **GS ( E *pL pH fn d1 d2*** (*fn* = 1)

| | | | | | | | | | |
|---|---|---|---|---|---|---|---|---|---|
| [Format] | ASCII | GS | ( | E | *pL* | *pH* | *fn* | *d1* | *d2* |
| | Hex | 1D | 28 | 45 | *pL* | *pH* | *fn* | *d1* | *d2* |
| | Decimal | 29 | 40 | 69 | *pL* | *pH* | *fn* | *d1* | *d2* |

[Range] ($pL + pH \times 256$) = 3 ($pL$ = 3 , $pH$ = 0)
*fn* = 1
*d1* = 73
*d2* = 78

[Description]
- Enters the user setting mode and transmits data that notice the mode has changed.

## <Function 2> **GS ( E *pL pH fn d1 d2 d3*** (*fn* = 2)

| | | | | | | | | | | |
|---|---|---|---|---|---|---|---|---|---|---|
| [Format] | ASCII | GS | ( | E | *pL* | *pH* | *fn* | *d1* | *d2* | *d3* |
| | Hex | 1D | 28 | 45 | *pL* | *pH* | *fn* | *d1* | *d2* | *d3* |
| | Decimal | 29 | 40 | 69 | *pL* | *pH* | *fn* | *d1* | *d2* | *d3* |

[Range] ($pL + pH \times 256$) = 4 ($pL$ = 4 , $pH$ = 0)
*fn* = 2
*d1* = 79
*d2* = 85
*d3* = 84

[Description]
- Ends the user setting mode and performs a software reset.
- Clears the receive and print buffers.
- Resets all settings value in the RAM (the printing area, the print styles, user-defined characters, and others) that was in effect at power on. (The data in the NV-memory are not reset.)

## <Function 3> **GS ( E *pL pH fn [a1 b18...b11]...[ak bk8...bk1]*** (*fn* = 3)

[Format]

| | | | | | | | | | |
|---|---|---|---|---|---|---|---|---|---|
| ASCII | GS | ( | E | *pL* | *pH* | *fn* | *[a1* | *b18 ... b11] ... [ak* | *bk8 ... bk1]* |
| Hex | 1D | 28 | 45 | *pL* | *pH* | *fn* | *[a1* | *b18 ... b11] ... [ak* | *bk8 ... bk1]* |
| Decimal | 29 | 40 | 69 | *pL* | *pH* | *fn* | *[a1* | *b18 ... b11] ... [ak* | *bk8 ... bk1]* |

[Range] $10 \le (pL + pH \times 256) \le 65530$ $(0 \le pL \le 255,\ 0 \le pH \le 255)$
*fn* = 3
*a* = 1, 2, 8
*b* = 48, 49, 50

[Default (upon shipment)]
[Msw 2-2] is set to On (49) and all other switches are set to Off (48).

[Description]
- Changes the memory switch specified by *a* to the values specified with *b*.
  - When *b* = 48, the applicable bit is turned Off.
  - When *b* = 49, the applicable bit is turned On.
  - When *b* = 50, the applicable bit is not changed. Set *b* = 50 as the reserved bit.
- Memory switch 1 (Msw 1: *a* = 1)

| Msw | Function | Setting value |
|---|---|---|
| 1-1 | Does not transmit the power-on notice. | 48 |
| | Transmits the power-on notice when processing an initialization. | 49 |
| 1-2 | Reserved. | 50 |
| 1-3 | Conditions for BUSY: the receive buffer is full or offline. | 48 |
| | Conditions for BUSY: the receive buffer is full. | 49 |
| 1-4 | Data processing for receiving error: prints “?” | 48 |
| | Data processing for receiving error: ignores the data. | 49 |
| 1-5 | Automatic line feed is disabled. | 48 |
| | Automatic line feed is enabled. | 49 |
| 1-6 | Connection of DM-D: not connected. | 48 |
| | Connection of DM-D: connected. | 49 |
| 1-7 | Pin #6: Not used for reset signal. | 48 |
| | Pin #6: Used for reset signal. | 49 |
| 1-8 | Pin #25: Not used for reset signal. | 48 |
| | Pin #25: Used for reset signal. | 49 |

Msw 1-5: Enabled in the parallel interface model.
Msw 1-6 to Msw 1-8: Enabled in the serial interface model.

- Memory switch 2 (Msw 2: *a* = 2)

| Msw | Function | Setting value |
|---|---|---|
| 2-1 | Reserved. | 50 |
| 2-2 | Autocutter is not installed. | 48 |
| | Autocutter is installed. | 49 |
| 2-3 ~ 2-8 | Reserved. | 50 |

- Memory switch 8 (Msw 8: *a* = 8)

| Msw | Function | Setting value |
|---|---|---|
| 8-1 ~ 8-5 | Reserved. | 50 |
| 8-6 | Number of columns (characters) per line printed on a slip: standard. | 48 |
| | Number of columns (characters) per line printed on a slip: increased. | 49 |
| 8-7 | Number of columns (characters) per line printed on roll paper: standard. | 48 |
| | Number of columns (characters) per line printed on roll paper: increased. | 49 |
| 8-8 | During printing, a paper roll cover open is treated as an error that automatically recover. | 48 |
| | During printing, a roll paper cover open is treated as an error that has the possibility of recovery. | 49 |

[Msw 8-6: Print columns on a slip]

| Setting of [Msw 8-6] | Standard | Increased |
|---|---|---|
| Font | Font A / font B / Extended font A | Font A/ font B/ Extended font A |
| Font structure (dots) | 12 × 24 / 9 × 17 / 15 × 24 | 11 × 24 / 8 × 17 / 15 × 24 |
| Maximum printing columns (characters) | 80 / 106 / 64 | 87 / 120 / 64 |

[Msw 8-7: Print columns on a paper roll]

| Setting of [Msw 8-7] | Standard | Increased |
|---|---|---|
| Font | Font A / font B / Extended font A | Font A/ font B / Extended font A |
| Font structure (dots) | 12 × 24 / 9 × 17 / 15 × 24 | 11 × 24 / 8 × 17 / 15 × 24 |
| Maximum printing columns (paper width: characters) | 57.5 mm: 30 / 40 / 24<br>69.5 mm: 36 / 48 / 28<br>76 mm: 40 / 53 / 32<br>82.5 mm: 42 / 56 / 34 | 57.5 mm: 32 / 45 / 24<br>69.5 mm: 39 / 54 / 28<br>76 mm: 43 / 60 / 32<br>82.5 mm: 46 / 64 / 34 |

## <Function 4> **GS ( E *pL pH fn a*** (*fn* = 4)

[Format]

| | | | | | | | |
|---|---|---|---|---|---|---|---|
| ASCII | GS | ( | E | *pL* | *pH* | *fn* | *a* |
| Hex | 1D | 28 | 45 | *pL* | *pH* | *fn* | *a* |
| Decimal | 29 | 40 | 69 | *pL* | *pH* | *fn* | *a* |

[Range] ($pL + pH \times 256$) = 2 ($pL$ = 2 , $pH$ = 0)
*fn* = 4
*a* =1, 2, 8

[Description] • Transmits the setting value(s) of the memory switch specified by *a*.

## <Function 5> **GS ( E *pL pH fn [a1 n1L n1H]...[ak nkL nkH]*** (*fn* = 5)

[Format]

| | | | | | | | | | | | | |
|---|---|---|---|---|---|---|---|---|---|---|---|---|
| ASCII | GS | ( | E | *pL* | *pH* | *fn* | *[a1* | *n1L* | *n1H]* ... | *[ak* | *nkL* | *nkH]* |
| Hex | 1D | 28 | 45 | *pL* | *pH* | *fn* | *[a1* | *n1L* | *n1H]* ... | *[ak* | *nkL* | *nkH]* |
| Decimal | 29 | 40 | 69 | *pL* | *pH* | *fn* | *[a1* | *n1L* | *n1H]* ... | *[ak* | *nkL* | *nkH]* |

[Range] $4 \le (pL + pH \times 256) \le 65533$ ($0 \le pL \le 255$, $0 \le pH \le 255$)
*fn* = 5
*a* = 3
($nL + nH \times 256$) = 2, 4, 5, 6 ($nL$ = 2,4,5,6, $nH$ = 0)

[Default] ($nL + nH \times 256$) = 5 ($nL$ = 5, $nH$ = 0) [when (*a*=3)]

[Description] • Sets the customized value specified by *a* according to the value ($nL + nH \times 256$).

| *a* | Customized value |
|---|---|
| 3 | Width of roll paper |

• Width of roll paper setting (*a* = 3)

| Value of ($nL + nH \times 256$) | Paper Width |
|---|---|
| 2 | 57.5 mm {2.26"} |
| 4 | 69.5 mm {2.74"} |
| 5 | 76 mm {2.99"} |
| 6 | 82.5 mm {3.25"} |

[Reference] Appendix I

## <Function 6> **GS ( E *pL pH fn a*** (*fn* = 6)

[Format]

| | | | | | | | |
|---|---|---|---|---|---|---|---|
| ASCII | GS | ( | E | *pL* | *pH* | *fn* | *a* |
| Hex | 1D | 28 | 45 | *pL* | *pH* | *fn* | *a* |
| Decimal | 29 | 40 | 69 | *pL* | *pH* | *fn* | *a* |

[Range] ($pL + pH \times 256$) = 2 ($pL$ = 2, $pH$ = 0)
*fn* = 6
*a* = 3

[Description] • Transmits the customized value specified by *a*.

| *a* | Customized value |
|---|---|
| 3 | Width of roll paper |

## <Function 7> **GS ( E *pL pH fn a d1 d2*** (*fn* = 7)

[Format]

| | | | | | | | | | |
|---|---|---|---|---|---|---|---|---|---|
| ASCII | GS | ( | E | *pL* | *pH* | *fn* | *a* | *d1* | *d2* |
| Hex | 1D | 28 | 45 | *pL* | *pH* | *fn* | *a* | *d1* | *d2* |
| Decimal | 29 | 40 | 69 | *pL* | *pH* | *fn* | *a* | *d1* | *d2* |

[Range]
($pL + pH \times 256$) = 4 ($pL$ = 4, $pH$ = 0)
$fn$ = 7
$a$ = 10,12
$d1$ = 30, 31
$d2$ = 30, 31 (where ($d1 \neq d2$))

[Description]
- Copies the data in the user-defined code page.
- $a$ specifies the font No.

| Font No. ($a$) | Font Type | Code page | Data Configuration | |
|---|---|---|---|---|
| | | | Dots in Horizontal Direction | Dots in Vertical Direction |
| 10 | 9 × 17 | Page255 | 9 | 17 |
| 12 | 12 × 24 | Page255 | 12 | 24 |

- Copy operation is specified by *d1, d2*.

| *d1* | *d2* | Function |
|---|---|---|
| 31 | 30 | Loads the character code page data for font No. ($a$) from the storage area to the active area (RAM). |
| 30 | 31 | Saves the character code page data in the active area to the storage area (Flash ROM) specified by font No. ($a$). |

## <Function 8> **GS ( E *pL pH fn y c1 c2 [x d1...d(y × x) ]k*** (*fn* = 8)

[Format]

| | | | | | | | | | | | | |
|---|---|---|---|---|---|---|---|---|---|---|---|---|
| ASCII | GS | ( | E | *pL* | *pH* | *fn* | *y* | *c1* | *c2* | *[ x* | *d1...d(y × x) ]k* |
| Hex | 1D | 28 | 45 | *pL* | *pH* | *fn* | *y* | *c1* | *c2* | *[ x* | *d1...d(y × x) ]k* |
| Decimal | 29 | 40 | 69 | *pL* | *pH* | *fn* | *y* | *c1* | *c2* | *[ x* | *d1...d(y × x) ]k* |

[Range]
$5 \leq (pL + pH \times 256) \leq 65535$ ($0 \leq pL \leq 255$, $0 \leq pH \leq 255$)
$fn$ = 8
$y$ = 3
$128 \leq c1 \leq c2 \leq 255$
$0 \leq x \leq 12$ (when Font A (12×24) is selected)
$0 \leq x \leq 9$ (when Font B (9×17) is selected)
$0 \leq d \leq 255$
$k = c2 - c1 + 1$

[Description]
- Defines the data for each character in the character code page in the active area (RAM).
- $y$ specifies the number of bytes in the vertical direction.
- $c1$ specifies the beginning character code for the definition, and $c2$ specifies the final code.
- $x$ specifies the number of dots in the horizontal direction.
- $d$ specifies the defined data (column format).

## <Function 9> **GS ( E *pL pH fn x c1 c2 [y d1...d(x × y) ]k*** (*fn* = 9)

[Format]

| | | | | | | | | | | | | |
|---|---|---|---|---|---|---|---|---|---|---|---|---|
| ASCII | GS | ( | E | *pL* | *pH* | *fn* | *x* | *c1* | *c2* | *[ y* | *d1...d(x × y) ]k* |
| Hex | 1D | 28 | 45 | *pL* | *pH* | *fn* | *x* | *c1* | *c2* | *[ y* | *d1...d(x × y) ]k* |
| Decimal | 29 | 40 | 69 | *pL* | *pH* | *fn* | *x* | *c1* | *c2* | *[ y* | *d1...d(x × y) ]k* |

[Range]

$5 \le (pL + pH \times 256) \le 65535$ $(0 \le pL \le 255, 0 \le pH \le 255)$
$fn = 9$
$x = 2$
$128 \le c1 \le c2 \le 255$
$0 \le y \le 24$ (when Font A (12×24) is selected)
$0 \le y \le 17$ (when Font B (9×17) is selected)
$0 \le d \le 255$
$k = c2 - c1 + 1$

[Description]

- Defines the data for each character in the character code page in the active area (RAM).
  - *x* specifies the number of bytes in the horizontal direction.
  - *c1* specifies the beginning character code for the definition, and *c2* specifies the final code.
  - *y* specifies the number of dots in the vertical direction.
  - *d* specifies the defined data (raster format).

## <Function 10> **GS ( E *pL pH fn c1 c2*** (*fn* = 10)

[Format]

| | | | | | | | | |
|---|---|---|---|---|---|---|---|---|
| ASCII | GS | ( | E | *pL* | *pH* | *fn* | *c1* | *c2* |
| Hex | 1D | 28 | 45 | *pL* | *pH* | *fn* | *c1* | *c2* |
| Decimal | 29 | 40 | 69 | *pL* | *pH* | *fn* | *c1* | *c2* |

[Range]

$(pL + pH \times 256) = 3$ $(pL = 3, pH = 0)$
$fn = 10$
$128 \le c1 \le 255$

[Description]

- Deletes the data for each character in the character code page in the active area (RAM).
  - *c1* specifies the beginning character code for the deletion, and *c2* specifies the final code.

## <Function 11> **GS ( E *pL pH fn a d1...dk*** (*fn* = 11)

[Format]

| | | | | | | | | |
|---|---|---|---|---|---|---|---|---|
| ASCII | GS | ( | E | *pL* | *pH* | *fn* | *a* | *d1 ... dk* |
| Hex | 1D | 28 | 45 | *pL* | *pH* | *fn* | *a* | *d1 ... dk* |
| Decimal | 29 | 40 | 69 | *pL* | *pH* | *fn* | *a* | *d1 ... dk* |

[Range]
$3 \le (pL + pH \times 256) \le 65535$ $(0 \le pL \le 255, 0 \le pH \le 255)$
$fn = 11$
$1 \le a \le 4$
$48 \le d \le 57$

[Default (upon shipment) ]
19200 bps, no parity, DTR/DSR control, 8 bits
*d1...dk* = “19200” (when (*a* = 1))
*d1* = 48 (when (*a* = 2))
*d1* = 48 (when (*a* = 3))
*d1* = 56 (when (*a* = 4))

[Description]
- Sets the communication conditions for the serial interface specified by *a* according to value *d*.

| *a* | Communication Condition | Specification of *d* |
|---|---|---|
| 1 | Transmission speed | *k* bytes of (*d1...dk*) |
| 2 | Parity | 1 byte of (*d1*) |
| 3 | Flow control | 1 byte of (*d1*) |
| 4 | Data length | 1 byte of (*d1*) |

- Transmission speed setting (*a* = 1)

| Transmission speed (bps) | *d1* | *d2* | *d3* | *d4* | *d5* | *d6* |
|---|---|---|---|---|---|---|
| 2400 | 50 | 52 | 48 | 48 | -- | -- |
| 4800 | 52 | 56 | 48 | 48 | -- | -- |
| 9600 | 57 | 54 | 48 | 48 | -- | -- |
| 19200 | 49 | 57 | 50 | 48 | 48 | -- |
| 38400 | 51 | 56 | 52 | 48 | 48 | -- |
| 57600 | 53 | 55 | 54 | 48 | 48 | -- |
| 115200 | 49 | 49 | 53 | 50 | 48 | 48 |

- Parity setting (*a* = 2)

| *d1* | Parity |
|---|---|
| 48 | No parity |
| 49 | Odd parity |
| 50 | Even parity |

- Flow control setting (*a* = 3)

| *d1* | Flow control |
|---|---|
| 48 | DTR/DSR |
| 49 | XON/XOFF |

• Data length setting ($a$ = 4)

| *d1* | Data length |
|---|---|
| 55 | 7 bits |
| 56 | 8 bits |

[Note] • The communication condition set by this function is enabled by executing <Function 2> or restarting the printer. Note that the host computer must be set to enable the printer to communicate with the host computer.

## <Function 12> **GS ( E *pL pH fn a*** (*fn* = 12)

[Format]

| | | | | | | | |
|---|---|---|---|---|---|---|---|
| ASCII | GS | ( | E | *pL* | *pH* | *fn* | *a* |
| Hex | 1D | 28 | 45 | *pL* | *pH* | *fn* | *a* |
| Decimal | 29 | 40 | 69 | *pL* | *pH* | *fn* | *a* |

[Range] $(pL + pH \times 256) = 2$ ($pL = 2$, $pH = 0$)
$fn = 12$
$1 \leq a \leq 4$

[Description] • Transmits the communication conditions of the serial interface specified by $a$.

| *a* | Communication conditions |
|---|---|
| 1 | Transmission speed |
| 2 | Parity |
| 3 | Flow control |
| 4 | Data length |

## GS ( G *pL pH fn [parameters]*

[Name] Select cut sheet control function(s)

[Description]
- Various processes are performed to the cut sheet.
  - *pL*, *pH* specify (*pL* + *pH* × 256) as the number of bytes after *pH* (*fn* and *[parameters]*).
  - *fn* specifies the function.
  - *[parameters]* specify the process of each function.

| *fn* | Format | Function No. | Function |
|---|---|---|---|
| 32 | **GS ( G *pL pH fn m*** | 32 | Transmits the status of the cut sheet. |
| 80 | **GS ( G *pL pH fn m*** | 80 | Selects the active sheet. |
| 81 | **GS ( G *pL pH fn m*** | 81 | Starts pre-process for cut sheet insertion. |
| 82 | **GS ( G *pL pH fn m*** | 82 | Ends pre-process for cut sheet insertion. |
| 83 | **GS ( G *pL pH fn m*** | 83 | Executes waiting process for cut sheet insertion. |
| 84 | **GS ( G *pL pH fn m*** | 84 | Feeds to the print starting position for the slip. |
| 85 | **GS ( G *pL pH fn m*** | 85 | Ends the processing for the cut sheet. |

[Note]
- When <Function 32> is transmitted, the following data must not be transmitted until the status is received.

## <Function 32> **GS ( G *pL pH fn m*** (*fn* = 32)

[Format]

| | | | | | | | |
|---|---|---|---|---|---|---|---|
| ASCII | GS | ( | G | *pL* | *pH* | *fn* | *m* |
| Hex | 1D | 28 | 47 | *pL* | *pH* | *fn* | *m* |
| Decimal | 29 | 40 | 71 | *pL* | *pH* | *fn* | *m* |

[Range] ($pL + pH \times 256$) = 2 ($pL$ = 2, $pH$ = 0)
*fn* = 32
*m* = 48

[Description] • Transmits the status of the cut sheet.

| Transmission data block | Hexadecimal | Decimal | Amount of data |
|---|---|---|---|
| Header | 37H | 55 | 1 byte |
| Identifier | 3AH | 58 | 1 byte |
| Status | (See table below) | | 1 byte |
| NUL | 00H | 0 | 1 byte |

<Status>

| Bit | Off/On | Hex | Decimal | Status |
|---|---|---|---|---|
| 0 | Off | 00 | 0 | It is possible to feed to the starting position to process the slip. |
| | On | 01 | 1 | It is impossible to feed to the starting position to process the slip. |
| 1 ~ 5 | -- | -- | -- | Reserved. |
| 6 | On | 40 | 64 | Fixed. |
| 7 | Off | 00 | 0 | Fixed. |

## <Function 80> **GS ( G *pL pH fn m*** (*fn* = 80)

[Format]

| | | | | | | | |
|---|---|---|---|---|---|---|---|
| ASCII | GS | ( | G | *pL* | *pH* | *fn* | *m* |
| Hex | 1D | 28 | 47 | *pL* | *pH* | *fn* | *m* |
| Decimal | 29 | 40 | 71 | *pL* | *pH* | *fn* | *m* |

[Range] ($pL + pH \times 256$) = 2 ($pL$ = 2, $pH$ = 0)
$fn$ = 80
$1 \leq m \leq 4$

[Default] $m$ = 3

[Description] • Selects the active sheet to be targeted for processing data.

| (*m*) Bit | Off/On | Hex | Decimal | Function |
|---|---|---|---|---|
| 0 | Off | 00 | 0 | Does not select roll paper as the active sheet. |
| | On | 01 | 1 | Selects roll paper as the active sheet. |
| 1 | Off | 00 | 0 | Does not select roll paper as the active sheet. |
| | On | 02 | 2 | Selects roll paper as the active sheet. |
| 2 | Off | 00 | 0 | Does not select the slip as the active sheet. |
| | On | 04 | 4 | Selects the slip as the active sheet. |
| 3 ~ 7 | Off | 00 | 0 | Reserved. |

## <Function 81> **GS ( G *pL pH fn m*** (*fn* = 81)

[Format]

| | | | | | | | |
|---|---|---|---|---|---|---|---|
| ASCII | GS | ( | G | *pL* | *pH* | *fn* | *m* |
| Hex | 1D | 28 | 47 | *pL* | *pH* | *fn* | *m* |
| Decimal | 29 | 40 | 71 | *pL* | *pH* | *fn* | *m* |

[Range] ($pL + pH \times 256$) = 2 ($pL$ =2, $pH$ = 0)
$fn$ = 81
$m$ = 48

[Description] • Starts the pre-processing for the cut sheet selected as the active sheet for insertion.

## <Function 82> **GS ( G *pL pH fn m*** (*fn* = 82)

[Format]

| | | | | | | | |
|---|---|---|---|---|---|---|---|
| ASCII | GS | ( | G | *pL* | *pH* | *fn* | *m* |
| Hex | 1D | 28 | 47 | *pL* | *pH* | *fn* | *m* |
| Decimal | 29 | 40 | 71 | *pL* | *pH* | *fn* | *m* |

[Range] ($pL + pH \times 256$) = 2 ($pL$ =2, $pH$ = 0)
$fn$ = 82
$m$ = 48

[Description] • Ends the pre-processing for the cut sheet selected as the active sheet for insertion.

## <Function 83> **GS ( G *pL pH fn m*** (*fn* = 83)

[Format]

| | | | | | | | |
|---|---|---|---|---|---|---|---|
| ASCII | GS | ( | G | *pL* | *pH* | *fn* | *m* |
| Hex | 1D | 28 | 47 | *pL* | *pH* | *fn* | *m* |
| Decimal | 29 | 40 | 71 | *pL* | *pH* | *fn* | *m* |

[Range] ($pL + pH \times 256$) = 2 ($pL$ =2, $pH$ = 0)
*fn* = 83
*m* = 48

[Description]
- Executes the processing for the cut sheet selected as the active sheet for insertion.

## <Function 84> **GS ( G *pL pH fn m*** (*fn* = 84)

[Format]

| | | | | | | | |
|---|---|---|---|---|---|---|---|
| ASCII | GS | ( | G | *pL* | *pH* | *fn* | *m* |
| Hex | 1D | 28 | 47 | *pL* | *pH* | *fn* | *m* |
| Decimal | 29 | 40 | 71 | *pL* | *pH* | *fn* | *m* |

[Range] ($pL + pH \times 256$) = 2 ($pL$ =2, $pH$ = 0)
*fn* = 84
*m* = 1

[Description]
- Feeds slip to print starting position.

[Notes]
- When slip is selected as the active sheet, the printer processes this function.
- Only one time is possible for feeding slip to the print starting position once the slip is inserted.

## <Function 85> **GS ( G *pL pH fn m*** (*fn* = 85)

[Format]

| | | | | | | | |
|---|---|---|---|---|---|---|---|
| ASCII | GS | ( | G | *pL* | *pH* | *fn* | *m* |
| Hex | 1D | 28 | 47 | *pL* | *pH* | *fn* | *m* |
| Decimal | 29 | 40 | 71 | *pL* | *pH* | *fn* | *m* |

[Range] ($pL + pH \times 256$) = 2 ($pL$ =2, $pH$ = 0)
*fn* = 85
*m* = 48, 49

[Description]
- Finishes the processing for the cut sheet after performing the function specified by *m* and selects roll paper as the active sheet.

| *m* | Function |
|---|---|
| 48 | The printer ejects the clamped cut sheet. |
| 49 | The printer executes release of the clamped cut sheet. |

- After executing the eject or release, the printer awaits removal of the paper.

[Note]
- When the cut sheet is selected as the active sheet, the printer processes this function.

## GS ( H *pL pH fn [parameters]*

[Name] Request response transmission

[Description]
- Various processes are performed as the response.
  - *pL*, *pH* specify (*pL* + *pH* × 256) as the number of bytes after *pH* (*fn* and *[parameters]*).
  - *fn* specifies the function.
  - *[parameters]* specify the process of each function.

| *fn* | Format | Function No. | Function |
|---|---|---|---|
| 48 | **GS ( H *pL pH fn m d1 d2 d3 d4*** | 48 | Specifies the process ID response. |
| 49 | **GS ( H *pL pH fn m d*** | 49 | Specifies the offline response. |

[Note]
- Do not use this command in a system in which the printer is used with the OPOS driver or the JavaPOS driver provided by Seiko Epson Corporation.

## <Function 48> GS ( H *pL pH fn m d1 d2 d3 d4* (*fn* = 48)

[Format]

| | | | | | | | | | | | |
|---|---|---|---|---|---|---|---|---|---|---|---|
| ASCII | GS | ( | H | *pL* | *pH* | *fn* | *m* | *d1* | *d2* | *d3* | *d4* |
| Hex | 1D | 28 | 48 | *pL* | *pH* | *fn* | *m* | *d1* | *d2* | *d3* | *d4* |
| Decimal | 29 | 40 | 72 | *pL* | *pH* | *fn* | *m* | *d1* | *d2* | *d3* | *d4* |

[Range] (*pL* + *pH* × 256) = 6 (*pL* =6, *pH* = 0)
*fn* = 48
*m* = 48
32 ≤ *d* ≤ 126

[Description]
- Transmits the specified process ID response.
  - *d1*, *d2*, *d3, d4* specify process ID.

## <Function 49> **GS ( H *pL pH fn m d*** (*fn* = 49)

[Format]

| ASCII | GS | ( | H | *pL* | *pH* | *fn* | *m* | *d* |
|---|---|---|---|---|---|---|---|---|
| Hex | 1D | 28 | 48 | *pL* | *pH* | *fn* | *m* | *d* |
| Decimal | 29 | 40 | 72 | *pL* | *pH* | *fn* | *m* | *d* |

[Range] $(pL + pH \times 256) = 3$ ($pL$ =3, $pH$ = 0)
$fn = 49$
$m = 48$
$0 \le d \le 2$, $48 \le d \le 50$

[Default] $d = 0$

[Description]
- Specifies or turns off the offline response transmission.

| *d* | Function |
|---|---|
| 0, 48 | Turns off the offline response transmission. |
| 1, 49 | Specify the offline response transmission (not including the offline cause). |
| 2, 50 | Specify the offline response transmission (including the offline cause). |

- When specifying offline response transmitting (*d* = 1,2,49,50), offline response is transmitted.

- When specifying offline response transmitting (*d* = 2, 50), the number of bytes for the offline cause which follows the offline response is 5.
  - First byte (information for unrecoverable error)

| Bit | Off/On | Hex | Decimal | Status |
|---|---|---|---|---|
| 0 | Off | 00 | 0 | No CPU execution error |
| | On | 01 | 1 | CPU execution error |
| 1 | Off | 00 | 0 | No read/write error in the memory |
| | On | 02 | 2 | Read/write error in the memory |
| 2 | Off | 00 | 0 | No read/write error in the gate array |
| | On | 04 | 4 | Read/write error in the gate array |
| 3 ~ 5 | -- | -- | -- | Reserved. |
| 6 | On | 40 | 64 | Fixed. |
| 7 | Off | 00 | 0 | Fixed. |

  - Second byte (information for unrecoverable error)

| Bit | Off/On | Hex | Decimal | Status |
|---|---|---|---|---|
| 0 | Off | 00 | 0 | No high voltage error |
| | On | 01 | 1 | High voltage error |
| 1 | Off | 00 | 0 | No low voltage error |
| | On | 02 | 2 | Low voltage error |
| 2 ~ 5 | -- | -- | -- | Reserved. |
| 6 | On | 40 | 64 | Fixed. |
| 7 | Off | 00 | 0 | Fixed. |

• Third byte (information for unrecoverable error)

| Bit | Off/On | Hex | Decimal | Status |
|---|---|---|---|---|
| 0 | Off | 00 | 0 | No internal circuit connection error (thermostat) |
| | On | 01 | 1 | Internal circuit connection error (thermostat) |
| 1 | Off | 00 | 0 | No internal circuit connection error (head high voltage) |
| | On | 02 | 2 | Internal circuit connection error (head high voltage) |
| 2 | Off | 00 | 0 | No internal circuit connection error (head low voltage) |
| | On | 04 | 4 | Internal circuit connection error (head low voltage) |
| 3 | Off | 00 | 0 | No internal circuit connection error (EEPROM) |
| | On | 08 | 8 | Internal circuit connection error (EEPROM) |
| 4 | -- | -- | -- | Reserved. |
| 5 | Off | 00 | 0 | No internal circuit connection error (number of pump driving) |
| | On | 20 | 32 | Internal circuit connection error (number of pump driving) |
| 6 | On | 40 | 64 | Fixed. |
| 7 | Off | 00 | 0 | Fixed. |

• Fourth byte (information for recoverable error)

| Bit | Off/On | Hex | Decimal | Status |
|---|---|---|---|---|
| 0 | Off | 00 | 0 | No autocutter error |
| | On | 01 | 1 | Autocutter error |
| 1 | Off | 00 | 0 | No roll paper cover open error (when [Msw8-8] is on) |
| | On | 02 | 2 | Roll paper cover open error (when [Msw8-8] is on) |
| 2 | Off | 00 | 0 | No cut sheet ejection error |
| | On | 04 | 4 | Cut sheet ejection error |
| 3 | -- | -- | -- | Reserved. |
| 4 | Off | 00 | 0 | No carriage home position detection error |
| | On | 10 | 16 | Carriage home position detection error |
| 5 | Off | 00 | 0 | No carriage out of phase detection error |
| | On | 20 | 32 | Carriage out of phase detection error |
| 6 | On | 40 | 64 | Fixed. |
| 7 | Off | 00 | 0 | Fixed. |

• Fifth byte (information for automatically recoverable error)

| Bit | Off/On | Hex | Decimal | Status |
|---|---|---|---|---|
| 0 | Off | 00 | 0 | No roll paper cover open error (when [Msw8-8] is off) |
| | On | 01 | 1 | Roll paper cover open error (when [Msw8-8] is off) |
| 1 | Off | 00 | 0 | No print head high temperature error |
| | On | 02 | 2 | Print head high temperature error |
| 2 | Off | 00 | 0 | No print head low temperature error |
| | On | 04 | 4 | Print head low temperature error |
| 3 ~ 5 | -- | -- | -- | Reserved. |
| 6 | On | 40 | 64 | Fixed. |
| 7 | Off | 00 | 0 | Fixed. |

## GS ( K *pL pH fn [parameters]*

[Name] Select print control method(s)

[Description]
- Specify the settings for the miscellaneous print control or mechanism operations.
- *pL*, *pH* specify (*pL* + *pH* × 256) as the number of bytes after *pH* (*fn* and *[parameters]*).
- *fn* specifies the function.
- *[parameters]* specify the process of each function.

| *fn* | Format | Function No. | Function |
|---|---|---|---|
| 48 | **GS ( K *pL pH fn m*** | 48 | Selects the print control mode. |

## <Function 48> **GS ( K *pL pH fn m*** (*fn* = 48)

[Format]

| | | | | | | | |
|---|---|---|---|---|---|---|---|
| ASCII | GS | ( | K | *pL* | *pH* | *fn* | *m* |
| Hex | 1D | 28 | 4B | *pL* | *pH* | *fn* | *m* |
| Decimal | 29 | 40 | 75 | *pL* | *pH* | *fn* | *m* |

[Range] ($pL + pH \times 256$) = 2 ($pL$ = 2, $pH$ = 0)
$fn$ = 48
$1 \le m \le 3$, $49 \le m \le 51$

[Default] $m$ = 2

[Description]
- Selects the print control mode specified by $m$.

| *m* | Print control mode |
|---|---|
| 1, 49 | Normal |
| 2, 50 | High speed |
| 3, 51 | Economy |

[Notes]
- Bar code printing or two-dimensional code printing is performed in the normal print control mode, regardless of the settings with this command.
- In page mode, if multiple types of print modes are mixed, such as bar codes, two-dimensional codes, or others, the printer prints the bar code or two-dimensional code in the normal print control mode regardless of the setting of this command.
- If the extended font A is printed in a line, the relationship between the setting of this function and the print control mode is as follows:

| Setting of this function | Actual print control mode |
|---|---|
| Normal ($m$ = 1, 49) | Print in normal |
| High Speed ($m$ = 2, 50) | Print in high speed |
| Economy ($m$ = 3, 51) | Print in high speed |

## GS ( L *pL pH m fn [parameters]*
## GS 8 L *p1 p2 p3 p4 m fn [parameters]*

[Name] Set graphics data

[Format]

| | | | | | | | | | | |
|---|---|---|---|---|---|---|---|---|---|---|
| ASCII | GS | ( | L | *pL* | *pH* | *m* | *fn* | *[parameters]* | | |
| Hex | 1D | 28 | 4C | *pL* | *pH* | *m* | *fn* | *[parameters]* | | |
| Decimal | 29 | 40 | 76 | *pL* | *pH* | *m* | *fn* | *[parameters]* | | |
| ASCII | GS | 8 | L | *p1* | *p2* | *p3* | *p4* | *m* | *fn* | *[parameters]* |
| Hex | 1D | 38 | 4C | *p1* | *p2* | *p3* | *p4* | *m* | *fn* | *[parameters]* |
| Decimal | 29 | 56 | 76 | *p1* | *p2* | *p3* | *p4* | *m* | *fn* | *[parameters]* |

- In the description below, only **GS ( L** is used for explanation.
  - Note that **GS ( L** and **GS 8 L** have the same function.
  - If the [parameters] in the Format column in the table below exceed 65533 bytes, use **GS 8 L**.
- The only difference between **GS ( L** and **GS 8 L** is as listed below. The format for **GS 8 L** is not provided in the following descriptions; however, [Range], [Default], [Description], and [Notes] for parameters other than those listed in the table below are the same as for **GS ( L**.

<Parameters specifying the number of parameters after *pH*>

| Command | Parameters | Structure | Maximum value |
|---|---|---|---|
| **GS ( L** | *pL*, *pH* | 2 bytes | 65,535 |
| **GS 8 L** | *p1, p2, p3, p4* | 4 bytes | 4,294,967,295 |

[Description]
- Processes graphics data.
  - *pL, pH* specify (*pL* + *pH* × 256) as the number of bytes after *pH* (*m*, *fn*, and *[parameters]*).
  - *fn* specifies the function.

- *[parameters]* specify the process of each function.

| *fn* | Format | Function No. | Function |
|---|---|---|---|
| 0, 48 | **GS ( L *pL pH m fn*** | 48 | Transmits the NV graphics memory capacity. |
| 2, 50 | **GS ( L *pL pH m fn*** | 50 | Prints the graphics data in the print buffer. |
| 3, 51 | **GS ( L *pL pH m fn*** | 51 | Transmits the remaining capacity of the NV graphics memory. |
| 4, 52 | **GS ( L *pL pH m fn*** | 52 | Transmits the remaining capacity of the downloaded graphics memory. |
| 64 | **GS ( L *pL pH m fn d1 d2*** | 64 | Transmits the defined NV graphics key code list. |
| 65 | **GS ( L *pL pH m fn d1 d2 d3*** | 65 | Deletes all NV graphics data. |
| 66 | **GS ( L *pL pH m fn kc1 kc2*** | 66 | Deletes the specified NV graphics data. |
| 67 | **GS ( L *pL pH m fn a kc1 kc2 b xL xH yL yH [c d1...dk]1...[c d1...dk]b*** | 67 | Defines the NV graphics data. (raster format) |
| 68 | **GS ( L *pL pH m fn a kc1 kc2 b xL xH yL yH [c d1...dk]1...[c d1...dk]b*** | 68 | Defines the NV graphics data. (column format) |
| 69 | **GS ( L *pL pH m fn kc1 kc2 x y*** | 69 | Prints the specified NV graphics data. |
| 80 | **GS ( L *pL pH m fn d1 d2*** | 80 | Transmits the defined downloaded graphics key code list. |
| 81 | **GS ( L *pL pH m fn d1 d2 d3*** | 81 | Deletes all download graphics data. |
| 82 | **GS ( L *pL pH m fn kc1 kc2*** | 82 | Deletes the specified download graphics data. |
| 83 | **GS ( L *pL pH m fn a kc1 kc2 b xL xH yL yH [c d1…dk]1…[c d1…dk]b*** | 83 | Defines the download graphics data. (raster format) |
| 84 | **GS ( L *pL pH m fn a kc1 kc2 b xL xH yL yH [c d1…dk]1…[c d1…dk]b*** | 84 | Defines the download graphics data. (column format) |
| 85 | **GS ( L *pL pH m fn kc1 kc2 x y*** | 85 | Prints the specified download graphics. |
| 112 | **GS ( L *pL pH m fn a bx by c xL xH yL yH d1…dk*** | 112 | Stores graphics data in the print buffer. (raster format) |
| 113 | **GS ( L *pL pH m fn a bx by c xL xH yL yH d1…dk*** | 113 | Stores graphics data in the print buffer. (column format) |

[Notes]

- Frequent write command executions by an NV memory write command may damage the NV memory. Therefore, it is recommended to write to the NV memory no more than 10 times a day.
- While processing this command, the printer is BUSY while writing the data to the NV memory and stops receiving data. Therefore, be sure not to transmit data, including real-time commands, during the execution of this command.
- When <Function 48, 51, 52, 64, or 80> is transmitted, the following data must not be transmitted until the status is received. And it will be necessary to perform the ESC/POS Handshaking Protocol procedures listed below when using <Function 64 or 80>.

## <Function 48> **GS ( L *pL pH m fn*** (*fn* = 0, 48)

[Format]

| | | | | | | | |
|---|---|---|---|---|---|---|---|
| ASCII | GS | ( | L | *pL* | *pH* | *m* | *fn* |
| Hex | 1D | 28 | 4C | *pL* | *pH* | *m* | *fn* |
| Decimal | 29 | 40 | 76 | *pL* | *pH* | *m* | *fn* |

[Range] ($pL + pH \times 256$) = 2 ($pL$ = 2 , $pH$ = 0)
$m$ = 48
$fn$ = 0, 48

[Description]
- Transmits the total capacity of the NV graphics memory (number of bytes in the NV graphics area).

## <Function 50> **GS ( L *pL pH m fn*** (*fn* = 2, 50)

[Format]

| | | | | | | | |
|---|---|---|---|---|---|---|---|
| ASCII | GS | ( | L | *pL* | *pH* | *m* | *fn* |
| Hex | 1D | 28 | 4C | *pL* | *pH* | *m* | *fn* |
| Decimal | 29 | 40 | 76 | *pL* | *pH* | *m* | *fn* |

[Range] ($pL + pH \times 256$) = 2 ($pL$ = 2, $pH$ = 0)
$m$ = 48
$fn$ = 2, 50

[Description]
- Prints the buffered graphics stored by the process of <Function 112 or 113>, and feeds paper for the amount corresponding to the number of dots in the Y direction of the buffered graphics.

## <Function 51> **GS ( L *pL pH m fn*** (*fn* = 3, 51)

[Format]

| | | | | | | | |
|---|---|---|---|---|---|---|---|
| ASCII | GS | ( | L | *pL* | *pH* | *m* | *fn* |
| Hex | 1D | 28 | 4C | *pL* | *pH* | *m* | *fn* |
| Decimal | 29 | 40 | 76 | *pL* | *pH* | *m* | *fn* |

[Range] ($pL + pH \times 256$) = 2 ($pL$ = 2, $pH$ = 0)
$m$ = 48
$fn$ = 3, 51

[Description]
- Transmits the number of bytes of remaining memory (unused area) in the NV graphics area.

## <Function 52> **GS ( L *pL pH m fn*** (*fn* = 4, 52)

[Format]

| | | | | | | | |
|---|---|---|---|---|---|---|---|
| ASCII | GS | ( | L | *pL* | *pH* | *m* | *fn* |
| Hex | 1D | 28 | 4C | *pL* | *pH* | *m* | *fn* |
| Decimal | 29 | 40 | 76 | *pL* | *pH* | *m* | *fn* |

[Range] ($pL + pH \times 256$) = 2 ($pL$ = 2, $pH$ = 0)
$m$ = 48
$fn$ = 4, 52

[Description]
- Transmits the number of bytes of remaining memory (unused area) in the downloaded graphics area.

## <Function 64> **GS ( L *pL pH m fn d1 d2*** (*fn* = 64)

| | | | | | | | | | | |
|---|---|---|---|---|---|---|---|---|---|---|
| [Format] | ASCII | GS | ( | L | *pL* | *pH* | *m* | *fn* | *d1* | *d2* |
| | Hex | 1D | 28 | 4C | *pL* | *pH* | *m* | *fn* | *d1* | *d2* |
| | Decimal | 29 | 40 | 76 | *pL* | *pH* | *m* | *fn* | *d1* | *d2* |

[Range] ($pL + pH \times 256$) = 4 ($pL$ = 4, $pH$ = 0)
*m* = 48
*fn* = 64
*d1* = 75
*d2* = 67

[Description] • Transmits the defined NV graphics key code list.

## <Function 65> **GS ( L *pL pH m fn d1 d2 d3*** (*fn* = 65)

| | | | | | | | | | | | |
|---|---|---|---|---|---|---|---|---|---|---|---|
| [Format] | ASCII | GS | ( | L | *pL* | *pH* | *m* | *fn* | *d1* | *d2* | *d3* |
| | Hex | 1D | 28 | 4C | *pL* | *pH* | *m* | *fn* | *d1* | *d2* | *d3* |
| | Decimal | 29 | 40 | 76 | *pL* | *pH* | *m* | *fn* | *d1* | *d2* | *d3* |

[Range] ($pL + pH \times 256$) = 5 ($pL$ = 5, $pH$ = 0)
*m* = 48
*fn* = 65
*d1* = 67
*d2* = 76
*d3* = 82

[Description] • Deletes all defined NV graphics.

## <Function 66> **GS ( L *pL pH m fn kc1 kc2*** (*fn* = 66)

| | | | | | | | | | | |
|---|---|---|---|---|---|---|---|---|---|---|
| [Format] | ASCII | GS | ( | L | *pL* | *pH* | *m* | *fn* | *kc1* | *kc2* |
| | Hex | 1D | 28 | 4C | *pL* | *pH* | *m* | *fn* | *kc1* | *kc2* |
| | Decimal | 29 | 40 | 76 | *pL* | *pH* | *m* | *fn* | *kc1* | *kc2* |

[Range] ($pL + pH \times 256$) = 4 ($pL$ = 4, $pH$ = 0)
*m* = 48
*fn* = 66
$32 \le kc1 \le 126$
$32 \le kc2 \le 126$

[Description] • Deletes the NV graphics data defined by the key codes (*kc1* and *kc2*) .

<Function 67>

**GS ( L *pL pH m fn a kc1 kc2 b xL xH yL yH [c d1…dk]1…[c d1....dk]b*** (*fn* = 67)

[Format]

| | | | | |
|---|---|---|---|---|
| ASCII | GS | ( | L | *pL pH m fn a kc1 kc2 b xL xH yL yH [c d1...dk]1... [c d1...dk]b* |
| Hex | 1D | 28 | 4C | *pL pH m fn a kc1 kc2 b xL xH yL yH [c d1...dk]1... [c d1...dk]b* |
| Decimal | 29 | 40 | 76 | *pL pH m fn a kc1 kc2 b xL xH yL yH [c d1...dk]1... [c d1...dk]b* |

[Range]

$12 \le (pL + pH \times 256) \le 65535$ $(0 \le pL \le 255, 0 \le pH \le 255)$
$m = 48$
$fn = 67$
$a = 48$
$32 \le kc1 \le 126$
$32 \le kc2 \le 126$
$b = 1, 2$
$1 \le (xL + xH \times 256) \le 8192$ $(0 \le xL \le 255, 0 \le xH \le 32)$
$1 \le (yL + yH \times 256) \le 2304$ $(0 \le yL \le 255, 0 \le yH \le 9)$
$49 \le c \le 51$ (for TM-J7600)
$c = 49$ (for TM-J7500)
$0 \le d \le 255$
$k = (\text{int}((xL + xH \times 256) + 7) / 8) \times (yL + yH \times 256)$
The entire capacity size = 384KB.

[Description]

- Defines the NV graphics data (raster format) as the record specified by the key codes (*kc1*, *kc2*) in the NV graphics area.
- *b* specifies the number of the color of the defined data.
- *xL*, xH specify the horizontal size as ($xL + xH \times 256$) dots.
- *yL*, yH specify the vertical size as ($yL + yH \times 256$) dots.
- *c* specifies the color of the defined data.

| *c* | Defined data color |
|---|---|
| 49 | Color 1 |
| 50 | Color 2 |
| 51 | Color 3 (color 1 + color 2) |

- *d* specifies the defined data (raster format).

[Note]

- In cases where there is insufficient capacity available for storing NV graphics data specified by ($xL+xH\times256$) and ($yL+yH\times256$), this function cannot be used.

<Function 68>

**GS ( L *pL pH m fn a kc1 kc2 b xL xH yL yH [c d1…dk]1…[c d1....dk]b*** (*fn* = 68)

[Format]

| | | | | |
|---|---|---|---|---|
| ASCII | GS | ( | L | *pL pH m fn a kc1 kc2 b xL xH yL yH [c d1...dk]1... [c d1...dk]b* |
| Hex | 1D | 28 | 4C | *pL pH m fn a kc1 kc2 b xL xH yL yH [c d1...dk]1... [c d1...dk]b* |
| Decimal | 29 | 40 | 76 | *pL pH m fn a kc1 kc2 b xL xH yL yH [c d1...dk]1... [c d1...dk]b* |

[Range]

$12 \le (pL + pH \times 256) \le 65535$ $(0 \le pL \le 255, 0 \le pH \le 255)$
$m = 48$
$fn = 68$
$a = 48$
$32 \le kc1 \le 126$
$32 \le kc2 \le 126$
$b = 1, 2$
$1 \le (xL + xH \times 256) \le 8192$ $(0 \le xL \le 255, 0 \le xH \le 32)$
$1 \le (yL + yH \times 256) \le 2304$ $(0 \le yL \le 255, 0 \le yH \le 9)$
$49 \le c \le 51$ (for TM-J7600)
$c = 49$ (for TM-J7500)
$0 \le d \le 255$
$k = (xL + xH \times 256) \times (\text{int}((yL + yH \times 256) + 7) / 8)$
The entire capacity size = 384KB.

[Description]

- Defines the NV graphics data (column format) as the record specified by the key codes (*kc1*, *kc2*) in the NV graphics area.
- *b* specifies the number of the color of the defined data.
- *xL*, *xH* specify the horizontal size as $(xL + xH \times 256)$ dots.
- *yL*, *yH* specify the vertical size as $(yL + yH \times 256)$ dots.
- *c* specifies the color of the defined data.

| *c* | Defined data color |
|---|---|
| 49 | Color 1 |
| 50 | Color 2 |
| 51 | Color 3 (color 1 + color 2) |

- *d* specifies the defined data (column format).

[Note]

- In cases where there is insufficient capacity available for storing NV graphics data specified by $(xL+xH\times256)$ and $(yL+yH\times256)$, this function cannot be used.

## <Function 69> **GS ( L *pL pH m fn kc1 kc2 x y*** (*fn* = 69)

| | | | | | | | | | | | | |
|---|---|---|---|---|---|---|---|---|---|---|---|---|
| [Format] | ASCII | GS | ( | L | *pL* | *pH* | *m* | *fn* | *kc1* | *kc2* | *x* | *y* |
| | Hex | 1D | 28 | 4C | *pL* | *pH* | *m* | *fn* | *kc1* | *kc2* | *x* | *y* |
| | Decimal | 29 | 40 | 76 | *pL* | *pH* | *m* | *fn* | *kc1* | *kc2* | *x* | *y* |

[Range] ($pL + pH \times 256$) = 6 ($pL$ = 6, $pH$ = 0)
$m$ = 48
$fn$ = 69
$32 \leq kc1 \leq 126$
$32 \leq kc2 \leq 126$
$x$ = 1, 2
$y$ = 1, 2

[Description]
- Prints the NV graphics data defined by the key codes (*kc1* and *kc2*). The graphics data is enlarged by *x* and *y* in the horizontal and vertical directions.

## <Function 80> **GS ( L *pL pH m fn d1 d2*** (*fn* = 80)

| | | | | | | | | | | |
|---|---|---|---|---|---|---|---|---|---|---|
| [Format] | ASCII | GS | ( | L | *pL* | *pH* | *m* | *fn* | *d1* | *d2* |
| | Hex | 1D | 28 | 4C | *pL* | *pH* | *m* | *fn* | *d1* | *d2* |
| | Decimal | 29 | 40 | 76 | *pL* | *pH* | *m* | *fn* | *d1* | *d2* |

[Range] ($pL + pH \times 256$) = 4 ($pL$ = 4, $pH$ = 0)
$m$ = 48
$fn$ = 80
$d1$ = 75
$d2$ = 67

[Description]
- Transmits the defined downloaded graphics key code list.

## <Function 81> **GS ( L *pL pH m fn d1 d2 d3*** (*fn* = 81)

| | | | | | | | | | | | |
|---|---|---|---|---|---|---|---|---|---|---|---|
| [Format] | ASCII | GS | ( | L | *pL* | *pH* | *m* | *fn* | *d1* | *d2* | *d3* |
| | Hex | 1D | 28 | 4C | *pL* | *pH* | *m* | *fn* | *d1* | *d2* | *d3* |
| | Decimal | 29 | 40 | 76 | *pL* | *pH* | *m* | *fn* | *d1* | *d2* | *d3* |

[Range] ($pL + pH \times 256$) = 5 ($pL$ = 5, $pH$ = 0)
$m$ = 48
$fn$ = 81
$d1$ = 67
$d2$ = 76
$d3$ = 82

[Description]
- Deletes all defined downloaded graphics.

## <Function 82> **GS ( L *pL pH m fn kc1 kc2*** (*fn* = 82)

[Format]

| | | | | | | | | | |
|---|---|---|---|---|---|---|---|---|---|
| ASCII | GS | ( | L | *pL* | *pH* | *m* | *fn* | *kc1* | *kc2* |
| Hex | 1D | 28 | 4C | *pL* | *pH* | *m* | *fn* | *kc1* | *kc2* |
| Decimal | 29 | 40 | 76 | *pL* | *pH* | *m* | *fn* | *kc1* | *kc2* |

[Range]
$(pL + pH \times 256) = 4$ $(pL = 4, pH = 0)$
$m = 48$
$fn = 82$
$32 \le kc1 \le 126$
$32 \le kc2 \le 126$

[Description]
- Deletes the downloaded graphics data defined by the key codes (*kc1* and *kc2*) .

## <Function 83>
## **GS ( L *pL pH m fn a kc1 kc2 b xL xH yL yH [c d1...dk]1...[c d1...dk]b*** (*fn* = 83)

[Format]

| | | | | |
|---|---|---|---|---|
| ASCII | GS | ( | L | *pL pH m fn a kc1 kc2 b xL xH yL yH [c d1...dk]1... [c d1...dk]b* |
| Hex | 1D | 28 | 4C | *pL pH m fn a kc1 kc2 b xL xH yL yH [c d1...dk]1... [c d1...dk]b* |
| Decimal | 29 | 40 | 76 | *pL pH m fn a kc1 kc2 b xL xH yL yH [c d1...dk]1... [c d1...dk]b* |

[Range]
$12 \le (pL + pH \times 256) \le 65535$ $(0 \le pL \le 255, 0 \le pH \le 255)$
$m = 48$
$fn = 83$
$a = 48$
$32 \le kc1 \le 126$
$32 \le kc2 \le 126$
$b = 1, 2$
$1 \le (xL + xH \times 256) \le 8192$ $(0 \le xL \le 255, 0 \le xH \le 32)$
$1 \le (yL + yH \times 256) \le 2304$ $(0 \le yL \le 255, 0 \le yH \le 9)$
$49 \le c \le 51$ (for TM-J7600)
$c = 49$ (for TM-J7500)
$0 \le d \le 255$
$k = (\text{int}((xL + xH \times 256) + 7) / 8) \times (yL + yH \times 256)$
The entire capacity size = 12304 bytes.

[Description]
- Defines the download graphics data (raster format) as the record specified by the key codes (*kc1*, *kc2*) in the download graphics area.
- *b* specifies the number of the color of the defined data.
- *xL*, *xH* specify the horizontal size as $(xL + xH \times 256)$ dots.
- *yL*, *yH* specify the vertical size as $(yL + yH \times 256)$ dots.
- *c* specifies the color of the defined data.

| *c* | Defined data color |
|---|---|
| 49 | Color 1 |
| 50 | Color 2 |
| 51 | Color 3 (color 1 + color 2) |

- *d* specifies the defined data (raster format).

[Note]
- In cases where there is insufficient capacity available for storing download graphics data specified by $(xL+xH\times256)$ and $(yL+yH\times256)$, this function cannot be used.

<Function 84>

**GS ( L *pL pH m fn a kc1 kc2 b xL xH yL yH [c d1...dk]1...[c d1...dk]b*** (*fn* = 84)

[Format]

| | | | | |
|---|---|---|---|---|
| ASCII | GS | ( | L | *pL pH m fn a kc1 kc2 b xL xH yL yH [c d1...dk]1... [c d1...dk]b* |
| Hex | 1D | 28 | 4C | *pL pH m fn a kc1 kc2 b xL xH yL yH [c d1...dk]1... [c d1...dk]b* |
| Decimal | 29 | 40 | 76 | *pL pH m fn a kc1 kc2 b xL xH yL yH [c d1...dk]1... [c d1...dk]b* |

[Range]

$12 \le (pL + pH \times 256) \le 65535$ $(0 \le pL \le 255, 0 \le pH \le 255)$
$m = 48$
$fn = 84$
$a = 48$
$32 \le kc1 \le 126$
$32 \le kc2 \le 126$
$b = 1, 2$
$1 \le (xL + xH \times 256) \le 8192$ $(0 \le xL \le 255, 0 \le xH \le 32)$
$1 \le (yL + yH \times 256) \le 2304$ $(0 \le yL \le 255, 0 \le yH \le 9)$
$49 \le c \le 51$ (for TM-J7600)
$c = 49$ (for TM-J7500)
$0 \le d \le 255$
$k = (xL + xH \times 256) \times (\text{int}((yL + yH \times 256) + 7) / 8)$
The entire capacity size = 12304 bytes.

[Description]

- Defines the download graphics data (column format) as the record specified by the key codes (*kc1*, *kc2*) in the download graphics area.
  - *b* specifies the number of the color of the defined data.
  - *xL*, *xH* specify the horizontal size as $(xL + xH \times 256)$ dots.
  - *yL*, *yH* specify the vertical size as $(yL + yH \times 256)$ dots.
  - *c* specifies the color of the defined data.

| *c* | Defined data color |
|---|---|
| 49 | Color 1 |
| 50 | Color 2 |
| 51 | Color 3 (color 1 + color 2) |

  - *d* specifies the defined data (column format).

[Note]

- In cases where there is insufficient capacity available for storing download graphics data specified by $(xL+xH\times256)$ and $(yL+yH\times256)$, this function cannot be used.

## <Function 85> **GS ( L *pL pH m fn kc1 kc2 x y*** (*fn* = 85)

[Format]

| | | | | | | | | | | | |
|---|---|---|---|---|---|---|---|---|---|---|---|
| ASCII | GS | ( | L | *pL* | *pH* | *m* | *fn* | *kc1* | *kc2* | *x* | *y* |
| Hex | 1D | 28 | 4C | *pL* | *pH* | *m* | *fn* | *kc1* | *kc2* | *x* | *y* |
| Decimal | 29 | 40 | 76 | *pL* | *pH* | *m* | *fn* | *kc1* | *kc2* | *x* | *y* |

[Range]
$(pL + pH \times 256) = 6$ $(pL = 6, pH = 0)$
$m = 48$
$fn = 85$
$32 \le kc1 \le 126$
$32 \le kc2 \le 126$
$x = 1, 2$
$y = 1, 2$

[Description]
- Prints the downloaded graphics data defined by the key codes (*kc1* and *kc2*). The graphics data is enlarged by *x* and *y* in the horizontal and vertical directions.

## <Function 112> **GS ( L *pL pH m fn a bx by c xL xH yL yH d1...dk*** (*fn* = 112)

[Format]

| | | | | | |
|---|---|---|---|---|---|
| ASCII | GS | ( | L | *pL pH m fn a bx by c xL xH yL yH d1...dk* |
| Hex | 1D | 28 | 4C | *pL pH m fn a bx by c xL xH yL yH d1...dk* |
| Decimal | 29 | 40 | 76 | *pL pH m fn a bx by c xL xH yL yH d1...dk* |

[Range]
$11 \le (pL + pH \times 256) \le 65535$ $(0 \le pL \le 255, 0 \le pH \le 255)$
$m = 48$
$fn = 112$
$a = 48$
$bx = 1, 2$
$by = 1, 2$
$49 \le c \le 51$ (for TM-J7600)
$c = 49$ (for TM-J7500)
$1 \le (xL + xH \times 256) \le 2048$ $(0 \le xL \le 255, 0 \le xH \le 8)$
$1 \le (yL + yH \times 256) \le 64$ $(1 \le yL \le 64, yH = 0)$
$0 \le d \le 255$
$k = (\text{int}((xL + xH \times 256) + 7) / 8) \times (yL + yH \times 256)$

[Description]
- Stores the graphics data (raster format) in the print buffer. The graphics data is enlarged by *bx* and *by* in the horizontal and vertical directions.
- *xL*, *xH* specify the horizontal size as $(xL + xH \times 256)$ dots.
- *yL*, *yH* specify the vertical size as $(yL + yH \times 256)$ dots.
- *c* specifies the color for the stored data.

| *c* | Printing color |
|---|---|
| 49 | Color 1 |
| 50 | Color 2 |
| 51 | Color 3 (color 1 and color 2) |

- *d* specifies the defined data (raster format).

## <Function 113> **GS ( L p*L pH m fn a bx by c xL xH yL yH d1...dk*** (*fn* = 113)

[Format]

| | | | | |
|---|---|---|---|---|
| ASCII | GS | ( | L | *pL pH m fn a bx by c xL xH yL yH d1...dk* |
| Hex | 1D | 28 | 4C | *pL pH m fn a bx by c xL xH yL yH d1...dk* |
| Decimal | 29 | 40 | 76 | *pL pH m fn a bx by c xL xH yL yH d1...dk* |

[Range]

$11 \le (pL + pH \times 256) \le 65535$ $(0 \le pL \le 255, 0 \le pH \le 255)$
$m = 48$
$fn = 113$
$a = 48$
$bx = 1, 2$
$by = 1, 2$
$49 \le c \le 51$ (for TM-J7600)
$c = 49$ (for TM-J7500)
$1 \le (xL + xH \times 256) \le 2048$ $(0 \le xL \le 255, 0 \le xH \le 8)$
$1 \le (yL + yH \times 256) \le 64$ $(1 \le yL \le 64, yH = 0)$
$0 \le d \le 255$
$k = (xL + xH \times 256) \times (\text{int}((yL + yH \times 256) + 7) / 8)$

[Description]

- Stores the graphics data (column format) in the print buffer. The graphics data is enlarged by *bx* and *by* in the horizontal and vertical directions.
  - *xL*, *xH* specify the horizontal size as $(xL + xH \times 256)$ dots.
  - *yL*, *yH* specify the vertical size as $(yL + yH \times 256)$ dots.
  - *c* specifies the color of the stored data.

| *c* | Printing color |
|---|---|
| 49 | Color 1 |
| 50 | Color 2 |
| 51 | Color 3 (color 1 and color 2) |

  - *d* specifies the defined data (column format).

## GS ( M *pL pH fn m*

[Name] Customize printer control value(s)

[Description]
- Customizes the printer control value(s)
  - *pL*, *pH* specify (*pL* + *pH* × 256) for the number of bytes after *pH* (*fn* and *m*).
  - *fn* specifies the function.
  - *m* specifies the process of each function.

| *fn* | Format | Function No. | Function |
|---|---|---|---|
| 1, 49 | **GS ( M *pL pH fn m*** | 1 | Saves the setting values in the work area (RAM) to the archive area (Flash ROM). |
| 2, 50 | **GS ( M *pL pH fn m*** | 2 | Loads the setting values specified in the work area (RAM). |
| 3, 51 | **GS ( M *pL pH fn m*** | 3 | Selects the setting values loaded to the work area after the initialization process. |

- Applied setting values for this command

| Setting value | Command |
|---|---|
| Status | **GS ( B, GS a, GS j** |
| Characters | **ESC SP, ESC !, ESC –, ESC E, ESC G, ESC M, ESC R, ESC t, ESC {, GS !, GS ( N** <Function 48,49,50>**, GS B** |
| Line spacing | **ESC 2, ESC 3** |
| Print position | **ESC D, ESC T, ESC a, GS L, GS W** |
| Cut sheet operation | **ESC F, ESC f** |
| Bar code | **GS H, GS f, GS h, GS w** |
| 2-dimensional code | **GS ( k** <Function 065> through <Function 070> |
| Other characteristics | **ESC U, ESC c 3, ESC c 4, ESC c 5, GS ( D, GS ( H** <Function 49>**, GS ( K** <Function 48>**, GS P** |

[Notes]
- Frequent write command executions by an NV memory write command may damage the NV memory. Therefore, it is recommended to write to the NV memory no more than 10 times a day.
- While processing this command, the printer is BUSY while writing the data to the NV memory and stops receiving data. Therefore, be sure not to transmit data, including real-time commands, during the execution of this command.

## <Function 1> **GS ( M *pL pH fn m*** (*fn* = 1,49)

[Format]

| | | | | | | | |
|---|---|---|---|---|---|---|---|
| ASCII | GS | ( | M | *pL* | *pH* | *fn* | *m* |
| Hex | 1D | 28 | 4D | *pL* | *pH* | *fn* | *m* |
| Decimal | 29 | 40 | 77 | *pL* | *pH* | *fn* | *m* |

[Range] ($pL + pH \times 256$) = 2 ($pL$ = 2, $pH$ = 0)
*fn* = 1, 49
*m* = 1, 49

[Description]
- Saves the setting values of commands listed in the table on the previous page and stored in the work area (RAM) to the archive area (Flash ROM).

## <Function 2> **GS ( M *pL pH fn m*** (*fn* = 2,50)

[Format]

| | | | | | | | |
|---|---|---|---|---|---|---|---|
| ASCII | GS | ( | M | *pL* | *pH* | *fn* | *m* |
| Hex | 1D | 28 | 4D | *pL* | *pH* | *fn* | *m* |
| Decimal | 29 | 40 | 77 | *pL* | *pH* | *fn* | *m* |

[Range] ($pL + pH \times 256$) = 2 ($pL$ = 2, $pH$ = 0)
*fn* = 2, 50
*m* = 0, 1, 48, 49

[Description]
- Loads the values specified with *m* as the current command settings in the work area.

| *m* | Function |
|---|---|
| 0, 48 | The default values described in this specification are applied. |
| 1, 49 | The setting values are stored in the archive area. |

[Note]
- For values not listed among the above commands are not affected.

## <Function 3> **GS ( M *pL pH fn m*** (*fn* = 3,51)

[Format]

| | | | | | | | |
|---|---|---|---|---|---|---|---|
| ASCII | GS | ( | M | *pL* | *pH* | *fn* | *m* |
| Hex | 1D | 28 | 4D | *pL* | *pH* | *fn* | *m* |
| Decimal | 29 | 40 | 77 | *pL* | *pH* | *fn* | *m* |

[Range] ($pL + pH \times 256$) = 2 ($pL$ = 2, $pH$ = 0)
*fn* = 3, 51
*m* = 0, 1, 48, 49

[Default (upon shipment)]
*m* = 0

[Description]
- Selects the command setting values loaded to the work area after the printer performs the initialization process.

| *m* | Function |
|---|---|
| 0, 48 | The default values described in this specification are applied. |
| 1, 49 | The setting values are stored in the archive area. |

[Note]
- For values not listed among the above commands, the default values described in this specification are applied.

## GS ( N *pL pH fn [parameters]*

[Name] Select character style(s)

[Description]
- Selects the character style(s).
  - *pL*, *pH* specify (*pL* + *pH* × 256) for the number of bytes after *pH* (*fn* and *[parameters]*).
  - *fn* specifies the function.
  - *[parameters]* specify the process of each function

| *fn* | Format | Function No. | Function |
|---|---|---|---|
| 48 | **GS ( N *pL pH fn m*** | 48 | Selects character color. |
| 49 | **GS ( N *pL pH fn m*** | 49 | Selects background color. |
| 50 | **GS ( N *pL pH fn m a*** | 50 | Turns shading mode on or off. |

### <Function 48> **GS ( N *pL pH fn m*** (*fn* = 48)

[Format]

| | | | | | | | |
|---|---|---|---|---|---|---|---|
| ASCII | GS | ( | N | *pL* | *pH* | *fn* | *m* |
| Hex | 1D | 28 | 4E | *pL* | *pH* | *fn* | *m* |
| Decimal | 29 | 40 | 78 | *pL* | *pH* | *fn* | *m* |

[Range] (*pL* + *pH* × 256) = 2 (*pL* = 2, *pH* = 0)
*fn* = 48
48 ≤ *m* ≤ 51 (for TM-J7600)
*m* = 48, 49 (for TM-J7500)

[Default] *m* = 49

[Description]
- Selects character color specified by *m*.

| *m* | Character color |
|---|---|
| 48 | No printing |
| 49 | Color 1 |
| 50 | Color 2 |
| 51 | Color 3 (color 1 + color 2) |

[Note]
- Color 1 is selected for the bit image after this command is executed (except for graphics defined by **GS ( L**) .

## <Function 49> **GS ( N *pL pH fn m*** (*fn* = 49)

[Format]

| | | | | | | | |
|---|---|---|---|---|---|---|---|
| ASCII | GS | ( | N | *pL* | *pH* | *fn* | *m* |
| Hex | 1D | 28 | 4E | *pL* | *pH* | *fn* | *m* |
| Decimal | 29 | 40 | 78 | *pL* | *pH* | *fn* | *m* |

[Range] $(pL + pH \times 256) = 2$ $(pL = 2, pH = 0)$
$fn = 49$
$48 \leq m \leq 51$

[Default] $m = 48$

[Description] • Selects background color specified by *m*.

| *m* | Background color |
|---|---|
| 48 | No printing |
| 49 | Color 1 |
| 50 | Color 2 |
| 51 | Color 3 (color 1 + color 2) |

## <Function 50> **GS ( N *pL pH fn m a*** (*fn* = 50)

[Format]

| | | | | | | | | |
|---|---|---|---|---|---|---|---|---|
| ASCII | GS | ( | N | *pL* | *pH* | *fn* | *m* | *a* |
| Hex | 1D | 28 | 4E | *pL* | *pH* | *fn* | *m* | *a* |
| Decimal | 29 | 40 | 78 | *pL* | *pH* | *fn* | *m* | *a* |

[Range] $(pL + pH \times 256) = 3$ $(pL = 3, pH = 0)$
$fn = 50$
$m = 0, 1, 48, 49$
$a = 48$

[Default] $m = 0$

[Description] • Turns shading mode on or off.

| *m* | Function |
|---|---|
| 0, 48 | Shading mode is turned off |
| 1, 49 | Shading mode is turned on |

## GS ( P *pL pH fn [parameters]*

[Name] Select page mode control function(s)

[Description]
- Various processes are performed for page mode.
  - *pL*, *pH* specify (*pL* + *pH* × 256) for the number of bytes after *pH* (*fn* and *[parameters]*).
  - *fn* specifies the function.
  - *[parameters]* specify the process of each function.

| *fn* | Format | Function No. | Function |
|---|---|---|---|
| 48 | **GS ( P *pL pH fn wxL wxH wyL wyH oxL oxH c*** | 48 | Sets size of printable area for page mode. |

### <Function 48> GS ( P *pL pH fn wxL wxH wyL wyH oxL oxH c* (*fn* = 48)

[Format]

| | | | | | | | | | | | | | |
|---|---|---|---|---|---|---|---|---|---|---|---|---|---|
| ASCII | GS | ( | P | *pL* | *pH* | *fn* | *wxL* | *wxH* | *wyL* | *wyH* | *oxL* | *oxH* | *c* |
| Hex | 1D | 28 | 50 | *pL* | *pH* | *fn* | *wxL* | *wxH* | *wyL* | *wyH* | *oxL* | *oxH* | *c* |
| Decimal | 29 | 40 | 80 | *pL* | *pH* | *fn* | *wxL* | *wxH* | *wyL* | *wyH* | *oxL* | *oxH* | *c* |

[Range]
(*pL* + *pH* × 256) = 8 (*pL* = 8, *pH* = 0)
*fn* = 48
1 ≤ (*wxL* + *wxH* × 256) ≤ 65535 (0 ≤ *wxL* ≤ 255, 0 ≤ *wxH* ≤ 255)
1 ≤ (*wyL* + *wyH* × 256) ≤ 65535 (0 ≤ *wyL* ≤ 255, 0 ≤ *wyH* ≤ 255)
0 ≤ (ox*L* + *oxH* × 256) ≤ 65535 (0 ≤ *oxL* ≤ 255, 0 ≤ *oxH* ≤ 255)
1 ≤ *c* ≤ 3 (for TM-J7600)
*c* = 1 (for TM-J7500)

[Default: For TM-J7600]
(*wxL* + *wxH* × 256) = 360 (*wxL* = 104, *wxH* = 1) [Roll paper: paper width 57.5 mm]
(*wyL* + *wyH* × 256) = 584 (*wyL* = 72, *wyH* = 2)
(*wxL* + *wxH* × 256) = 432 (*wxL* = 176, *wxH* = 1) [Roll paper: paper width 69.5 mm]
(*wyL* + *wyH* × 256) = 488 (*wyL* = 232, *wyH* = 1)
(*wxL* + *wxH* × 256) = 480 (*wxL* = 224, *wxH* = 1) [Roll paper: paper width 76 mm]
(*wyL* + *wyH* × 256) = 440 (*wyL* = 184, *wyH* = 1)
(*wxL* + *wxH* × 256) = 512 (*wxL* = 0, *wxH* = 2) [Roll paper: paper width 82.5 mm]
(*wyL* + *wyH* × 256) = 416 (*wyL* = 160, *wyH* = 1)
(*wxL* + *wxH* × 256) = 960 (*wxL* = 192, *wxH* = 3) [Slip]
(*wyL* + *wyH* × 256) = 216 (*wyL* = 216, *wyH* = 0)
(ox*L* + ox*H* × 256) = 0 (ox*L* = 0, ox*H* = 0) [Roll paper / Slip]
*c* = 3 [Roll paper / Slip]

[Default: For TM-J7500]

($wxL + wxH \times 256$) = 360 ($wxL$ = 104, $wxH$ = 1) [Roll paper: paper width 57.5 mm]
($wyL + wyH \times 256$) = 1176 ($wyL$ = 152, $wyH$ = 4)
($wxL + wxH \times 256$) = 432 ($wxL$ = 176, $wxH$ = 1) [Roll paper: paper width 69.5 mm]
($wyL + wyH \times 256$) = 984 ($wyL$ = 216, $wyH$ = 3)
($wxL + wxH \times 256$) = 480 ($wxL$ = 224, $wxH$ = 1) [Roll paper: paper width 76 mm]
($wyL + wyH \times 256$) = 880 ($wyL$ = 112, $wyH$ = 3)
($wxL + wxH \times 256$) = 512 ($wxL$ = 0, $wxH$ = 2) [Roll paper: paper width 82.5 mm]
($wyL + wyH \times 256$) = 832 ($wyL$ = 64, $wyH$ = 3)
($wxL + wxH \times 256$) = 960 ($wxL$ = 192, $wxH$ = 3) [Slip]
($wyL + wyH \times 256$) = 440 ($wyL$ = 184, $wyH$ = 1)
($oxL + oxH \times 256$) = 0 ($oxL$ = 0, $oxH$ = 0) [Roll paper / Slip]
$c$ = 1 [Roll paper / Slip]

[Description]

- Sets the printable area for page mode.
  - w$xL$, w$xH$ specify the horizontal size of the printable area with [(w$xL$ + w$xH$ × 256) × (horizontal motion unit)].
  - w$yL$, w$yH$ specify the vertical size of the printable area with [(w$yL$ + w$yH$ × 256) × (vertical motion unit)].
  - o$xL$, $oxH$ specify the horizontal offset of the printable area with [(o$xL$ + o$xH$ × 256) × (horizontal motion unit)].
  - $c$ specifies the color for printing in page mode.

| $c$ | Color |
|---|---|
| 1 | Color 1 only |
| 2 | Color 2 only |
| 3 | Color 1 and color 2 |

[Notes]

- On the TM-J7600, if $c$ is specified as 1 or 2, the printer can use the same printable area size as for the TM-J7500.
- This command sets the size of the printable area both for the paper roll and slip.

## GS ( k *pL pH cn fn [parameters]*

[Name] Set up and print symbol

[Description]
- Processes the data concerning two-dimensional code.
  - *pL*, *pH* specify (*pL* + *pH* × 256) as the number of bytes after *pH* (*cn*, *fn*, and *[parameters]*).
  - *cn* specifies the type of symbol.
  - *fn* specifies the function.
  - *[parameters]* specify the process of each function.

| *cn* | Type of Symbol |
|---|---|
| 48 | PDF417 (2-dimensional code) |

| *fn* | Format | Function No. | Function |
|---|---|---|---|
| 65 | **GS ( k *pL pH cn fn n*** | 065 | PDF417: Sets the number of columns in the data region. |
| 66 | **GS ( k *pL pH cn fn n*** | 066 | PDF417: Sets the number of rows. |
| 67 | **GS ( k *pL pH cn fn n*** | 067 | PDF417: Sets the width of module. |
| 68 | **GS ( k *pL pH cn fn n*** | 068 | PDF417: Sets the row height. |
| 69 | **GS ( k *pL pH cn fn m n*** | 069 | PDF417: Sets the error correction level. |
| 70 | **GS ( k *pL pH cn fn m*** | 070 | PDF417: Specifies PDF417 options. |
| 80 | **GS ( k *pL pH cn fn m d1...dk*** | 080 | PDF417: Stores data in the symbol storage area. |
| 81 | **GS ( k *pL pH cn fn m*** | 081 | PDF417: Prints symbol data in the symbol storage area. |
| 82 | **GS ( k *pL pH cn fn m*** | 082 | PDF417: Transmits the size information of the symbol data in the symbol storage area. |

- "Symbol data" refers to the data received with <Function 080> before encoding.
- "Symbol storage area" refers to the range for storing data received with <Function 080> before encoding.

[Note]
- When <Function 082> is transmitted, the following data must not be transmitted until the status is received.

[Reference] Appendix A

## <Function 065> **GS ( k *pL pH cn fn n*** (*cn* = 48, *fn* = 65)

[Format]

| | | | | | | | | |
|---|---|---|---|---|---|---|---|---|
| ASCII | GS | ( | k | *pL* | *pH* | *cn* | *fn* | *n* |
| Hex | 1D | 28 | 6B | *pL* | *pH* | *cn* | *fn* | *n* |
| Decimal | 29 | 40 | 107 | *pL* | *pH* | *cn* | *fn* | *n* |

[Range]
$(pL + pH \times 256) = 3$ ($pL = 3$, $pH = 0$)
$cn = 48$
$fn = 65$
$0 \le n \le 30$

[Default]
$n = 0$

[Description]
- Sets the number of columns in the data region for PDF417.
  - When ($n = 0$), specifies automatic processing. In this case, the number of columns in the data region is calculated with the number of codewords or the range of printing area.
  - When ($n \neq 0$), sets the number of columns in the data region to *n* codewords.

[Notes]
- The following data are not included in the number of columns.
  - Start pattern and stop pattern
  - Left-row indicator codewords and right-row indicator codewords

## <Function 066> **GS ( k *pL pH cn fn n*** (*cn* = 48, *fn* = 66)

[Format]

| | | | | | | | | |
|---|---|---|---|---|---|---|---|---|
| ASCII | GS | ( | k | *pL* | *pH* | *cn* | *fn* | *n* |
| Hex | 1D | 28 | 6B | *pL* | *pH* | *cn* | *fn* | *n* |
| Decimal | 29 | 40 | 107 | *pL* | *pH* | *cn* | *fn* | *n* |

[Range]
$(pL + pH \times 256) = 3$ ($pL = 3$, $pH = 0$)
$cn = 48$
$fn = 66$
$n = 0, 3 \le n \le 90$

[Default]
$n = 0$

[Description]
- Sets the number of rows for PDF417.
  - When ($n = 0$), specifies automatic processing. In this case, the number of rows in the data region is calculated with the number of codewords or the range of printing area.
  - When ($n \neq 0$), sets the number of rows to *n* rows.

## <Function 067> **GS ( k *pL pH cn fn n*** (*cn* = 48, *fn* = 67)

| | | | | | | | | | |
|---|---|---|---|---|---|---|---|---|---|
| [Format] | ASCII | GS | ( | k | *pL* | *pH* | *cn* | *fn* | *n* |
| | Hex | 1D | 28 | 6B | *pL* | *pH* | *cn* | *fn* | *n* |
| | Decimal | 29 | 40 | 107 | *pL* | *pH* | *cn* | *fn* | *n* |

[Range] ($pL + pH \times 256$) = 3 ($pL$ = 3, $pH$ = 0)
$cn$ = 48
$fn$ = 67
$2 \leq n \leq 8$

[Default] $n$ =3

[Description] • Sets the width of module for PDF417 to $n$ dots.

## <Function 068> **GS ( k *pL pH cn fn n*** (*cn* = 48, *fn* = 68)

| | | | | | | | | | |
|---|---|---|---|---|---|---|---|---|---|
| [Format] | ASCII | GS | ( | k | *pL* | *pH* | *cn* | *fn* | *n* |
| | Hex | 1D | 28 | 6B | *pL* | *pH* | *cn* | *fn* | *n* |
| | Decimal | 29 | 40 | 107 | *pL* | *pH* | *cn* | *fn* | *n* |

[Range] ($pL + pH \times 256$) = 3 ($pL$ = 3, $pH$ = 0)
$cn$ = 48
$fn$ = 68
$2 \leq n \leq 8$

[Default] $n$ = 3

[Description] • Sets the row height for PDF417 to [$n \times$ (the width of module)].

## <Function 069> **GS ( k *pL pH cn fn n*** (*cn* = 48, *fn* = 69)

[Format]

| ASCII | GS | ( | k | *pL* | *pH* | *cn* | *fn* | *m* | *n* |
|---|---|---|---|---|---|---|---|---|---|
| Hex | 1D | 28 | 6B | *pL* | *pH* | *cn* | *fn* | *m* | *n* |
| Decimal | 29 | 40 | 107 | *pL* | *pH* | *cn* | *fn* | *m* | *n* |

[Range] ($pL + pH \times 256$) = 4 ($pL$ = 4, $pH$ = 0)
$cn$ = 48
$fn$ = 69
$m$ = 48, 49
$48 \le n \le 56$ [when ($m$ = 48)]
$1 \le n \le 40$ [when ($m$ = 49)]

[Default] $m$ = 49, $n$ = 1

[Description]
- Sets the error correction level for PDF417.
  - When ($m$ = 48), the error correction level is set by the “Level Setting” and cancels the “Proportional Setting”. The number of error correction codewords are shown in the table below

| *n* | Function | Number of error correction codewords |
|---|---|---|
| 48 | Select error correction level 0 | 2 |
| 49 | Select error correction level 1 | 4 |
| 50 | Select error correction level 2 | 8 |
| 51 | Select error correction level 3 | 16 |
| 52 | Select error correction level 4 | 32 |
| 53 | Select error correction level 5 | 64 |
| 54 | Select error correction level 6 | 128 |
| 55 | Select error correction level 7 | 256 |
| 56 | Select error correction level 8 | 512 |

  - When ($m$ = 49), the error correction level is set by the “Proportional Setting” to the level indicated by the number of codewords and cancels the “Level Setting”. The rate is set to [$n \times 10\%$].
    The error correction levels in the following table are determined by the calculation [Data codeword $\times$ $n$ $\times$ 0.1 = (A)] (fractions of 0.5 and over are rounded up, and others are truncated.)

| Result (A) | Error correction level | Number of error correction codeword |
|---|---|---|
| 0 ~ 3 | 1 | 4 |
| 4 ~ 10 | 2 | 8 |
| 11 ~ 20 | 3 | 16 |
| 21 ~ 45 | 4 | 32 |
| 46 ~ 100 | 5 | 64 |
| 101 ~ 200 | 6 | 128 |
| 201 ~ 400 | 7 | 256 |
| 401 or more | 8 | 512 |

## <Function 070> **GS ( k *pL pH cn fn m*** (*cn* = 48, *fn* = 70)

[Format]

| | | | | | | | | |
|---|---|---|---|---|---|---|---|---|
| ASCII | GS | ( | k | *pL* | *pH* | *cn* | *fn* | *m* |
| Hex | 1D | 28 | 6B | *pL* | *pH* | *cn* | *fn* | *m* |
| Decimal | 29 | 40 | 107 | *pL* | *pH* | *cn* | *fn* | *m* |

[Range] $(pL + pH \times 256) = 3$ $(pL = 3, pH = 0)$
$cn = 48$
$fn = 70$
$m = 0, 1$

[Default] $m = 0$

[Description]
- Specifies the options for PDF417.

| *m* | Function |
|---|---|
| 0 | Selects the standard PDF417. |
| 1 | Selects the truncated PDF417. |

## <Function 080> **GS ( k *pL pH cn fn m d1…dk*** (*cn* = 48, *fn* = 80)

[Format]

| | | | | | | | | | |
|---|---|---|---|---|---|---|---|---|---|
| ASCII | GS | ( | k | *pL* | *pH* | *cn* | *fn* | *m* | *d1…dk* |
| Hex | 1D | 28 | 6B | *pL* | *pH* | *cn* | *fn* | *m* | *d1…dk* |
| Decimal | 29 | 40 | 107 | *pL* | *pH* | *cn* | *fn* | *m* | *d1…dk* |

[Range] $4 \le (pL + pH \times 256) \le 65535$ $(0 \le pL \le 255, 0 \le pH \le 255)$
$cn = 48$
$fn = 80$
$m = 48$
$0 \le d \le 255$
$k = (pL + pH \times 256) - 3$

[Description]
- Stores the PDF417 symbol data (*d1...dk*) in the symbol storage area.

## <Function 081> **GS ( k *pL pH cn fn m*** (*cn* = 48, *fn* = 81)

[Format]

| | | | | | | | | |
|---|---|---|---|---|---|---|---|---|
| ASCII | GS | ( | k | *pL* | *pH* | *cn* | *fn* | *m* |
| Hex | 1D | 28 | 6B | *pL* | *pH* | *cn* | *fn* | *m* |
| Decimal | 29 | 40 | 107 | *pL* | *pH* | *cn* | *fn* | *m* |

[Range] ($pL + pH \times 256$) = 3 ($pL$ = 3, $pH$ = 0)
*cn* = 48
*fn* = 81
*m* = 48

[Description]
- Encodes and prints the PDF417 symbol data in the symbol storage area by the process of <Function 080>.

[Note]
- Consider that a quiet zone (left, right, upward, and upward spaces area, depending on the PDF417 symbol specifications) must be ensured for PDF417 printing.
- In standard mode, a symbol higher than 831 dots cannot be printed with this printer.

## <Function 082> **GS ( k *pL pH cn fn m*** (*cn* = 48, *fn* = 82)

[Format]

| | | | | | | | | |
|---|---|---|---|---|---|---|---|---|
| ASCII | GS | ( | k | *pL* | *pH* | *cn* | *fn* | *m* |
| Hex | 1D | 28 | 6B | *pL* | *pH* | *cn* | *fn* | *m* |
| Decimal | 29 | 40 | 107 | *pL* | *pH* | *cn* | *fn* | *m* |

[Range] ($pL + pH \times 256$) = 3 ($pL$ = 3, $pH$ = 0)
*cn* = 48
*fn* = 82
*m* = 48

[Description]
- Transmits the size information of the encoded symbol data in the symbol storage area by the process of <Function 080>.

[Notes]
- This function doesn't print.
- The size information does not include a quiet zone (left, right, upward, and upward spaces area, depending on the PDF417 symbol specifications).

## GS B *n*

[Name] Turn white/black reverse printing mode on/off

[Format]

| | | | |
|---|---|---|---|
| ASCII | GS | B | *n* |
| Hex | 1D | 42 | *n* |
| Decimal | 29 | 66 | *n* |

[Range] $0 \le n \le 255$

[Default] $n = 0$

[Description]
- Turns white/black reverse printing mode on or off.
  - When the LSB of *n* is 0, white/black reverse mode is turned off.
  - When the LSB of *n* is 1, white/black reverse mode is turned on.

## GS H *n*

[Name] Select printing position for HRI characters

[Format]

| | | | |
|---|---|---|---|
| ASCII | GS | H | *n* |
| Hex | 1D | 48 | *n* |
| Decimal | 29 | 72 | *n* |

[Range] $0 \le n \le 3$, $48 \le n \le 51$

[Default] $n = 0$

[Description]
- Selects the printing position of HRI characters when printing a bar code.

| *n* | Printing position |
|---|---|
| 0, 48 | Not printed. |
| 1, 49 | Above the bar code. |
| 2, 50 | Below the bar code. |
| 3, 51 | Both above and below the bar code. |

## GS I *n*

[Name] Transmit printer ID

[Format]

| | | | |
|---|---|---|---|
| ASCII | GS | I | *n* |
| Hex | 1D | 49 | *n* |
| Decimal | 29 | 73 | *n* |

[Range] $1 \le n \le 3$, $49 \le n \le 51$, $65 \le n \le 68$, $n = 112$

[Description]
- Transmits the printer ID specified.

| *n* | Printer ID type | ID |
|---|---|---|
| 1, 49 | Printer model ID | Hexadecimal: 47H Decimal: 71 |
| 2, 50 | Type ID | See table [Type ID]. |
| 3, 51 | Firmware version ID | Depends on firmware version. |

[Type ID]

| Bit | Off/On | Hex | Decimal | Contents |
|---|---|---|---|---|
| 0 | -- | -- | -- | Reserved. |
| 1 | Off | 00 | 0 | Autocutter not installed.<br>(Memory switch [Msw 2-2] is set to Off.) |
| | On | 02 | 2 | Autocutter installed.<br>(Memory switch [Msw 2-2] is set to On.) |
| 2 | Off | 00 | 0 | DM-D series customer display not connected.<br>(Memory switch [Msw 1-6] is set to Off.) |
| | On | 04 | 4 | DM-D series customer display connected.<br>(Memory switch [Msw 1-6] set to On.) |
| 3 | -- | -- | -- | Reserved. |
| 4 | Off | 00 | 0 | Fixed. |
| 5,6 | -- | -- | -- | Reserved. |
| 7 | Off | 00 | 0 | Fixed. |

- Transmits the printer information specified.

| *n* | Type of printer information | Contents |
|---|---|---|
| 65 | Firmware version | Depends on firmware version. |
| 66 | Manufacturer | “EPSON” |
| 67 | Printer name | “TM-J7600” (two-color model).<br>”TM-J7500” (single-color model). |
| 68 | Product ID | Serial number. |
| 112 | Type ID (B) | See table [Type ID (B)]. |

[Type ID (B)]

| Bit | Off/On | Hex | Decimal | Contents |
|---|---|---|---|---|
| 0 | Off | 00 | 0 | Single-color model TM-J7500 |
| | On | 01 | 1 | Two-color model TM-J7600 |
| 1 ~ 5 | -- | -- | -- | Reserved. |
| 6 | On | 40 | 64 | Fixed. |
| 7 | Off | 00 | 0 | Fixed. |

[Note]

- When this command is transmitted, the following data must not be transmitted until the status is received.

## GS L *nL nH*

| | | | | | |
|---|---|---|---|---|---|
| [Name] | Set left margin | | | | |
| [Format] | ASCII | GS | L | *nL* | *nH* |
| | Hex | 1D | 4C | *nL* | *nH* |
| | Decimal | 29 | 76 | *nL* | *nH* |
| [Range] | $0 \le (nL + nH \times 256) \le 65535$ $(0 \le nL \le 255, 0 \le nH \le 255)$ | | | | |
| [Default] | $(nL + nH \times 256) = 0$ $(nL = 0, nH = 0)$ | | | | |
| [Description] | • Sets the left margin as $[(nL + nH \times 256) \times$ (horizontal motion unit)]. | | | | |

## GS P *x y*

| | | | | | |
|---|---|---|---|---|---|
| [Name] | Set horizontal and vertical motion units | | | | |
| [Format] | ASCII | GS | P | *x* | *y* |
| | Hex | 1D | 50 | *x* | *y* |
| | Decimal | 29 | 80 | *x* | *y* |
| [Range] | $0 \le x \le 255$<br>$0 \le y \le 255$ | | | | |
| [Default] | $x = 180, y = 180$ | | | | |
| [Description] | • Sets the horizontal and vertical motion units to approximately 25.4/*x* mm {1/*x*'} and approximately 25.4/*y* mm {1/*y*'}, respectively.<br>• When *x* and *y* are set to 0, the default setting of each value is used. | | | | |

## GS T *n*

[Name] Set print position to the beginning of print line

[Format]

| | | | |
|---|---|---|---|
| ASCII | GS | T | *n* |
| Hex | 1D | 54 | *n* |
| Decimal | 29 | 84 | *n* |

[Range] *n* = 0, 1, 48, 49

[Description]
- Sets the printing position to the beginning of the print line in standard mode, when the operation specified with *n* is finished.

| *n* | Function |
|---|---|
| 0, 48 | Cancel data in the current print buffer. |
| 1, 49 | Print data in the current print buffer. |

## <A> GS V *m*
## <B> GS V *m n*

[Name] Select cut mode and cut paper

[Format]

| | | | | | |
|---|---|---|---|---|---|
| <A> | ASCII | GS | V | *m* | |
| | Hex | 1D | 56 | *m* | |
| | Decimal | 29 | 86 | *m* | |
| <B> | ASCII | GS | V | *m* | *n* |
| | Hex | 1D | 56 | *m* | *n* |
| | Decimal | 29 | 86 | *m* | *n* |

[Range] <A> *m* = 0, 1, 48, 49
<B> *m* = 65, 66, $0 \le n \le 255$

[Description]
- Cuts paper in the specified mode.

| | *m* | Function |
|---|---|---|
| <A> | 0, 48<br>1, 49 | Cuts paper |
| <B> | 65, 66 | Feeds paper to (cut position + [*n* × (vertical motion unit)]) and cuts the paper. |

[Note]
- This printer executes a partial cut (one point left uncut).

## GS W *nL nH*

[Name] Set printing area width

[Format]

| | | | | |
|---|---|---|---|---|
| ASCII | GS | W | *nL* | *nH* |
| Hex | 1D | 57 | *nL* | *nH* |
| Decimal | 29 | 87 | *nL* | *nH* |

[Range] $0 \le (nL + nH \times 256) \le 65535$ $(0 \le nL \le 255,\ 0 \le nH \le 255)$

[Default]
$(nL + nH \times 256) = 360$ $(nL = 104,\ nH = 1)$ [Roll paper: paper width 57.5mm]
$(nL + nH \times 256) = 432$ $(nL = 176,\ nH = 1)$ [Roll paper: paper width 69.5mm]
$(nL + nH \times 256) = 480$ $(nL = 224,\ nH = 1)$ [Roll paper: paper width 76mm]
$(nL + nH \times 256) = 512$ $(nL = 0,\ nH = 2)$ [Roll paper: paper width 82.5mm]
$(nL + nH \times 256) = 960$ $(nL = 192,\ nH = 3)$ [Slip]

[Description]
- Sets the printing area width as [$(nL + nH \times 256) \times$ (horizontal motion unit)] in standard mode.

## GS \ *nL nH*

[Name] Set relative vertical print position in page mode

[Format]

| | | | | |
|---|---|---|---|---|
| ASCII | GS | \ | *nL* | *nH* |
| Hex | 1D | 5C | *nL* | *nH* |
| Decimal | 29 | 92 | *nL* | *nH* |

[Range] $-32768 \le (nL + nH \times 256) \le 32767$

[Description]
- In page mode, sets the next printing position to [$(nL + nH \times 256) \times$ (horizontal or vertical motion unit)] from the current position.
- A positive number specifies downward movement, and a negative number specifies upward movement.

## GS a *n*

[Name] Enable/disable Automatic Status Back (ASB)

[Format]

| | | | |
|---|---|---|---|
| ASCII | GS | a | *n* |
| Hex | 1D | 61 | *n* |
| Decimal | 29 | 97 | *n* |

[Range] $0 \le n \le 255$

[Default] *n* = 0 (when memory switch [Msw 1-3] is off.)
*n* = 2 (when memory switch [Msw 1-3] is on.)

[Description]
- Enables or disables basic ASB (Automatic Status Back).

| (*n*) Bit | Off/On | Hex | Decimal | Function |
|---|---|---|---|---|
| 0 | Off | 00 | 0 | Drawer kick out connector status disabled. |
| | On | 01 | 1 | Drawer kick out connector status enabled. |
| 1 | Off | 00 | 0 | Online/offline status disabled. |
| | On | 02 | 2 | Online/offline status enabled. |
| 2 | Off | 00 | 0 | Error status disabled. |
| | On | 04 | 4 | Error status enabled. |
| 3 | Off | 00 | 0 | Roll paper sensor status disabled. |
| | On | 08 | 8 | Roll paper sensor status enabled. |
| 4 | Off | 00 | 0 | Reserved. |
| 5 | Off | 00 | 0 | Cut sheet sensor and status disabled. |
| | On | 20 | 32 | Cut sheet sensor and status enabled. |
| 6 | Off | 00 | 0 | Panel button status disabled. |
| | On | 40 | 64 | Panel button status enabled. |
| 7 | Off | 00 | 0 | Reserved. |

- After that while basic ASB is active, the selected enabled basic ASB status is transmitted whenever the status changes.

- The basic ASB status to be transmitted is contained in the four bytes that follow:
  - First byte (printer information)

| Bit | Off/On | Hex | Decimal | Status |
|---|---|---|---|---|
| 0, 1 | Off | 00 | 0 | Fixed. |
| 2 | Off | 00 | 0 | Drawer kick out connector pin 3 is LOW. |
| | On | 04 | 4 | Drawer kick out connector pin 3 is HIGH. |
| 3 | Off | 00 | 0 | Online. |
| | On | 08 | 8 | Offline. |
| 4 | On | 10 | 16 | Fixed. |
| 5 | Off | 00 | 0 | Cover is closed. |
| | On | 20 | 32 | Cover is open. |
| 6 | Off | 00 | 0 | Paper is not being fed by the paper FEED button. |
| | On | 40 | 64 | Paper is being fed by the paper FEED button. |
| 7 | Off | 00 | 0 | Fixed. |

Bit 5: While the paper roll cover or the carriage cover is open, the bit indicates “cover is open.”

  - Second byte (printer information)

| Bit | Off/On | Hex | Decimal | Status |
|---|---|---|---|---|
| 0 | -- | -- | -- | Reserved. |
| 1 | Off | 00 | 0 | Paper FEED button is turned off. |
| | On | 02 | 2 | Paper FEED button is turned on. |
| 2 | Off | 00 | 0 | No mechanical error. |
| | On | 04 | 4 | Mechanical error. |
| 3 | Off | 00 | 0 | No autocutter error. |
| | On | 08 | 8 | Autocutter error. |
| 4 | Off | 00 | 0 | Fixed. |
| 5 | Off | 00 | 0 | No unrecoverable error. |
| | On | 20 | 32 | Unrecoverable error. |
| 6 | Off | 00 | 0 | No automatically recoverable error. |
| | On | 40 | 64 | Automatically recoverable error. |
| 7 | Off | 00 | 0 | Fixed. |

Bit 2: If "paper roll cover open" is set as a recoverable error using the memory switch, a mechanical error occurs if the cover is open while printing on the paper roll.

Bit 6: If "paper roll cover open" is set as an automatically recoverable error using the memory switch, an automatically recoverable error occurs if the cover is open while printing on the paper roll. The head high/low temperature errors are also regarded as automatically recoverable errors.

• Third byte (paper sensor information)

| Bit | Off/On | Hex | Decimal | Status |
|---|---|---|---|---|
| 0, 1 | Off | 00 | 0 | Roll paper near-end sensor: paper adequate. |
| | On | 03 | 3 | Roll paper near-end sensor: paper near end. |
| 2, 3 | Off | 00 | 0 | Roll paper end sensor: paper present. |
| | On | 0C | 12 | Roll paper end sensor: paper not present. |
| 4 | Off | 00 | 0 | Fixed. |
| 5 | Off | 00 | 0 | TOF sensor: paper present. |
| | On | 20 | 32 | TOF sensor: paper not present. |
| 6 | Off | 00 | 0 | BOF sensor: paper present. |
| | On | 40 | 64 | BOF sensor: paper not present. |
| 7 | Off | 00 | 0 | Fixed. |

Bits 2 and 3: The paper roll cover closed status is maintained while the paper roll cover is open.

Bit 6: Refer to Section 3.9.1, Sensors and LED Indicators, part 2) BOF sensor, for the status of the BOF sensor.

• Fourth byte (paper sensor information)

| Bit | Off/On | Hex | Decimal | Status |
|---|---|---|---|---|
| 0 | Off | 00 | 0 | Slip is selected as the active sheet. |
| | On | 01 | 1 | Slip is not selected as the active sheet. |
| 1 | Off | 00 | 0 | Can print on slip. |
| | On | 02 | 2 | Cannot print on slip. |
| 2, 3 | -- | -- | -- | Reserved. |
| 4 | Off | 00 | 0 | Fixed. |
| 5, 6 | -- | -- | -- | Reserved. |
| 7 | Off | 00 | 0 | Fixed. |

## GS f *n*

[Name] Select font for HRI characters

[Format]

| | | | |
|---|---|---|---|
| ASCII | GS | f | *n* |
| Hex | 1D | 66 | *n* |
| Decimal | 29 | 102 | *n* |

[Range] *n* = 0, 1, 48, 49

[Default] *n* = 0

[Description]
- Selects a font for the HRI characters used when printing a bar code.

| *n* | Function |
|---|---|
| 0, 48 | Character font A selected. |
| 1, 49 | Character font B selected. |

## GS g 0 *m nL nH*

[Name] Initialize maintenance counter

[Format]

| | | | | | | |
|---|---|---|---|---|---|---|
| ASCII | GS | g | 0 | *m* | *nL* | *nH* |
| Hex | 1D | 67 | 30 | *m* | *nL* | *nH* |
| Decimal | 29 | 103 | 48 | *m* | *nL* | *nH* |

[Range] *m* = 0
($nL + nH \times 256$) = 30, 31, 32, 33, 34, 35, 50, 70
($nL$ = 30,31,32,33,34,35,50,70, $nH$ = 0)

[Description]
- Sets the specified resettable maintenance counter to 0.
- $nL$, $nH$ specify the maintenance counter number as ($nL + nH \times 256$).

| ($nL + nH \times 256$) | | Maintenance counter [Units] |
|---|---|---|
| Hex | Decimal | |
| 1E | 30 | Number of line feeds (for roll paper) [Lines]. |
| 1F | 31 | Average number of head shots (color 1) [Shots]. |
| 20 | 32 | Average number of head shots (color 2) [Shots]. |
| 21 | 33 | Number of carriage operations [Cycles]. |
| 22 | 34 | Number of pump operations [Cycles]. |
| 23 | 35 | Number of line feeds (for slip) [Lines]. |
| 32 | 50 | Number of autocutter operations [Cycles]. |
| 46 | 70 | Printer operation time [Hours]. |

[Note]
- Frequent write command executions by an NV memory write command may damage the NV memory. Therefore, it is recommended to write to the NV memory no more than 10 times a day.

[Reference] Appendix E

## GS g 2 *m nL nH*

[Name] Transmit maintenance counter

[Format]

| | | | | | | |
|---|---|---|---|---|---|---|
| ASCII | GS | g | 2 | *m* | *nL* | *nH* |
| Hex | 1D | 67 | 32 | *m* | *nL* | *nH* |
| Decimal | 29 | 103 | 50 | *m* | *nL* | *nH* |

[Range] $m = 0$

$(nL + nH \times 256) = 30, 31, 32, 33, 34, 35, 50, 70$

($nL$ = 30,31,32,33,34,35,50,70, $nH = 0$)

$(nL + nH \times 256) = 158, 159, 160, 161, 162, 163, 178, 198$

($nL$ = 158,159,160,161,162,163,178,198, $nH = 0$)

[Description]
- Transmits the value of the specified maintenance counter.
  - $nL$, $nH$ specify the maintenance counter number as ($nL + nH \times 256$).

| ($nL + nH \times 256$) | | | |
|---|---|---|---|
| Hex | Decimal | Maintenance counter [Units] | Kind of counter |
| 1E | 30 | Number of line feeds (for roll paper) [Lines]. | Resettable (can be reset) |
| 1F | 31 | Average number of head shots (color 1) [Shots]. | |
| 20 | 32 | Average number of head shots (color 2) [Shots]. | |
| 21 | 33 | Number of carriage operations [Cycles]. | |
| 22 | 34 | Number of pump operations [Cycles]. | |
| 23 | 35 | Number of line feeds (for slip) [Lines]. | |
| 32 | 50 | Number of autocutter operations [Cycles]. | |
| 46 | 70 | Printer operation time [Hours]. | |
| 9E | 158 | Number of line feeds (for roll paper) [Lines]. | Cumulative |
| 9F | 159 | Average number of head shots (color 1) [Shots]. | |
| A0 | 160 | Average number of head shots (color 2) [Shots]. | |
| A1 | 161 | Number of carriage operations [Cycles]. | |
| A2 | 162 | Number of pump operations [Cycles]. | |
| A3 | 163 | Number of line feeds (for slip) [Lines]. | |
| B2 | 178 | Number of autocutter operations [Cycles]. | |
| C6 | 198 | Printer operation time [Hours]. | |

[Notes]
- The maintenance counter values are measurements; therefore, their values will be affected by the timing of errors and how and when the power is turned off.
- When this command is transmitted, the following data must not be transmitted until the status is received.

[Reference] Appendix E

## GS h *n*

[Name] Set bar code height

[Format]

| | | | |
|---|---|---|---|
| ASCII | GS | h | *n* |
| Hex | 1D | 68 | *n* |
| Decimal | 29 | 104 | *n* |

[Range] $1 \le n \le 255$

[Default] $n = 162$

[Description]
- Sets the height of the bar code to *n* dots.

## GS j *n*

[Name] Enable/disable Automatic Status Back (ASB) for ink.

[Format]

| | | | |
|---|---|---|---|
| ASCII | GS | j | *n* |
| Hex | 1D | 6A | *n* |
| Decimal | 29 | 106 | *n* |

[Range] $0 \le n \le 255$

[Default] $n = 0$ (when memory switch [Msw 1-3] is Off.)
$n = 1$ (when memory switch [Msw 1-3] is On.)

[Description]
- Enables or disables ink ASB (Automatic Status Back).

| (*n*) Bit | Off/On | Hex | Decimal | Function |
|---|---|---|---|---|
| 0 | Off | 00 | 0 | Online/offline status of ink unit disabled. |
| | On | 01 | 1 | Online/offline status of ink unit enabled. |
| 1 | Off | 00 | 0 | Ink sensor status disabled. |
| | On | 02 | 2 | Ink sensor status enabled. |
| 2 ~ 7 | Off | 00 | 0 | Reserved. |

- After that while ink ASB is active, the selected enabled ink ASB status is transmitted whenever the status changes.

- Ink ASB status to be transmitted is the four bytes that follow:

| Ink ASB status | Hex | Decimal | Amount of data |
|---|---|---|---|
| Header | 35H | 53 | 1 byte |
| Status A | See table [Status A] | | 1 byte |
| Status B | See table [Status B] | | 1 byte |
| NUL | 00H | 0 | 1 byte |

[Status A]

| Bit | Off/On | Hex | Decimal | Status |
|---|---|---|---|---|
| 0 | Off | 00 | 0 | Ink near-end sensor: ink adequate (color 1). |
| | On | 01 | 1 | Ink near-end sensor: ink near end (color 1). |
| 1 | Off | 00 | 0 | Ink present (color 1). |
| | On | 02 | 2 | Ink not present (color 1). |
| 2 | Off | 00 | 0 | Ink cartridge sensor: cartridge present (color 1). |
| | On | 04 | 4 | Ink cartridge sensor: cartridge not present (color 1). |
| 3 | Off | 00 | 0 | Ink cartridge sensor: cartridge present (color 2). |
| | On | 08 | 8 | Ink cartridge sensor: cartridge not present (color 2). |
| 4 | -- | -- | -- | Reserved. |
| 5 | Off | 00 | 0 | Cleaning not being performed. |
| | On | 20 | 32 | Cleaning being performed. |
| 6 | On | 40 | 64 | Fixed. |
| 7 | Off | 00 | 0 | Fixed. |

Bits 0 ~ 3: The carriage cover closed status is maintained while the carriage cover is open.

Bit 3: The status for the single-color printer (TM-J7500) should always be "cartridge present."

[Status B]

| Bit | Off/On | Hex | Decimal | Status |
|---|---|---|---|---|
| 0 | Off | 00 | 0 | Ink near-end sensor: ink adequate (color 2). |
| | On | 01 | 1 | Ink near-end sensor: ink near end (color 2). |
| 1 | Off | 00 | 0 | Ink present (color 2). |
| | On | 02 | 2 | Ink not present (color 2). |
| 2 ~ 5 | -- | -- | -- | Reserved. |
| 6 | On | 40 | 64 | Fixed. |
| 7 | Off | 00 | 0 | Fixed. |

- The carriage cover closed status is maintained while the carriage cover is open.
- The status for the single-color printer (TM-J7500) should always be "ink present," "ink adequate," and "cartridge present."

## <A> GS k *m d1...dk NUL*
## <B> GS k *m n d1...dn*

[Name] Print bar code

[Format]

| | | | | | | |
|---|---|---|---|---|---|---|
| <A> | ASCII | GS | k | *m* | *d1...dk* | *NUL* |
| | Hex | 1D | 6B | *m* | *d1...dk* | *00* |
| | Decimal | 29 | 107 | *m* | *d1...dk* | *0* |
| <B> | ASCII | GS | k | *m* | *n* | *d1...dn* |
| | Hex | 1D | 6B | *m* | *n* | *d1...dn* |
| | Decimal | 29 | 107 | *m* | *n* | *d1...dn* |

[Range] <A> $0 \le m \le 6$ (*k* and *d* see description)
<B> $65 \le m \le 73$ (*n* and *d* see description)

[Description]
- Prints the bar code with the bar code system that is specified.

For <Function A>

| *m* | Bar code system | Range of *k* | Range of *d* |
|---|---|---|---|
| 0 | UPC-A | $11 \le k \le 12$ | $48 \le d \le 57$ |
| 1 | UPC-E | $11 \le k \le 12$ | $48 \le d \le 57$ |
| 2 | JAN13 (EAN13) | $12 \le k \le 13$ | $48 \le d \le 57$ |
| 3 | JAN8 (EAN8) | $7 \le k \le 8$ | $48 \le d \le 57$ |
| 4 | CODE39 | $1 \le k$ | $48 \le d \le 57$ , $65 \le d \le 90$ ,<br>$d$ = 32,36,37,42,43,45,46,47 |
| 5 | ITF | $1 \le k$ (even number) | $48 \le d \le 57$ |
| 6 | CODABAR (NW7) | $1 \le k$ | $48 \le d \le 57$ , $65 \le d \le 68$ ,<br>$d$ = 36,43,45,46,47,58 |

For <Function B>

| *m* | Bar code system | Range of *n* | Range of *d* |
|---|---|---|---|
| 65 | UPC-A | $11 \le n \le 12$ | $48 \le d \le 57$ |
| 66 | UPC-E | $11 \le n \le 12$ | $48 \le d \le 57$ |
| 67 | JAN13 (EAN13) | $12 \le n \le 13$ | $48 \le d \le 57$ |
| 68 | JAN8 (EAN8) | $7 \le n \le 8$ | $48 \le d \le 57$ |
| 69 | CODE39 | $1 \le n \le 255$ | $48 \le d \le 57$ , $65 \le d \le 90$ ,<br>$d$ = 32,36,37,42, 43,45,46,47 |
| 70 | ITF | $2 \le n \le 254$<br>(even number) | $48 \le d \le 57$ |
| 71 | CODABAR (NW7) | $1 \le n \le 255$ | $48 \le d \le 57$ , $65 \le d \le 68$ ,<br>$d$ = 36,43,45,46,47,58 |
| 72 | CODE93 | $1 \le n \le 255$ | $0 \le d \le 127$ |
| 73 | CODE128 | $2 \le n \le 255$ | $0 \le d \le 127$ |

- Parameter (*k*) of <Function A> is used to indicate the number of bytes of bar code data.
- Parameter (*n*) of <Function B> specifies the number of bytes of bar code data.
- *d* specifies the bar code data.

[Note]
- Consider that a quiet zone (left or right side space area, depending on the bar code specifications) must be ensured for bar code printing.

[Reference] Appendix A

## GS r *n*

[Name] Transmit status

[Format]

| | | | |
|---|---|---|---|
| ASCII | GS | r | *n* |
| Hex | 1D | 72 | *n* |
| Decimal | 29 | 114 | *n* |

[Range] $1 \le n \le 4$, $49 \le n \le 52$, $n = 80$

[Description]
- Transmits the status.

| *n* | Function |
|---|---|
| 1, 49 | Transmits paper sensor status. |
| 2, 50 | Transmits drawer kick out connector status. |
| 3, 51 | Transmits slip status. |
| 4, 52 | Transmits ink status. |
| 80 | Transmits the remaining print area on a slip in dots. |

- This printer transmits the following status.
  - Paper sensor status (*n* = 1, 49)

| Bit | Off/On | Hex | Decimal | Status |
|---|---|---|---|---|
| 0, 1 | Off | 00 | 0 | Roll paper near-end sensor: paper adequate. |
| | On | 03 | 3 | Roll paper near-end sensor: paper near end. |
| 2, 3 | Off | 00 | 0 | Roll paper end sensor: paper present. |
| | On | 0C | 12 | Roll paper end sensor: paper not present. |
| 4 | Off | 00 | 0 | Fixed. |
| 5 | Off | 00 | 0 | TOF sensor: paper present. |
| | On | 20 | 32 | TOF sensor: paper not present. |
| 6 | Off | 00 | 0 | BOF sensor: paper present. |
| | On | 40 | 64 | BOF sensor: paper not present. |
| 7 | Off | 00 | 0 | Fixed. |

Bits 2 and 3: The paper roll cover closed status is maintained while the paper roll cover is open (this command cannot be executed).

Bit 6: Refer to Section 3.9.1, Sensors and LED Indicators, part 2) BOF sensor, for the status of the BOF sensor.

  - Drawer kick out connector status (*n* = 2, 50)

| Bit | Off/On | Hex | Decimal | Status |
|---|---|---|---|---|
| 0 | Off | 00 | 0 | Drawer kick out connector pin 3 is LOW. |
| | On | 01 | 1 | Drawer kick out connector pin 3 is HIGH. |
| 1 ~ 3 | -- | -- | -- | Reserved. |
| 4 | Off | 00 | 0 | Fixed. |
| 5, 6 | -- | -- | -- | Reserved. |
| 7 | Off | 00 | 0 | Fixed. |

• Slip Status (*n* = 3, 51)
Transmits the remaining print area in slip printing, which is determined by the height of resident characters using values from the table below:

| The number of remaining dots | Slip status | |
|---|---|---|
| | Hex | Decimal |
| Impossible to print on the slip or 0 ~ 23 | 00 | 0 |
| 24 ~ 47 | 01 | 1 |
| 48 ~ 71 | 02 | 2 |
| 72 ~ 95 | 03 | 3 |
| \| | \| | \| |
| 360 dots or more | 0F | 15 |

• Ink status (*n* = 4, 52)

| Bit | Off/On | Hex | Decimal | Status |
|---|---|---|---|---|
| 0 | Off | 00 | 0 | Ink near-end sensor: ink adequate (color 1). |
| | On | 01 | 1 | Ink near-end sensor: ink near end (color 1). |
| 1 | Off | 00 | 0 | Ink near-end sensor: ink adequate (color 2). |
| | On | 02 | 2 | Ink near-end sensor: ink near end (color 2). |
| 2, 3 | -- | -- | -- | Reserved. |
| 4 | Off | 00 | 0 | Fixed. |
| 5, 6 | -- | -- | -- | Reserved. |
| 7 | Off | 00 | 0 | Fixed. |

Bit 1: The status for the single-color printer (TM-J7500) should always be "ink adequate."

Bits 0 and 1: The carriage cover closed status is maintained while the carriage cover is open.

• Slip dot status (*n* = 80)
The remaining print area in slip printing is transmitted as a number of dots based on the normal dot pitch.

| Slip dot status | Hexadecimal | Decimal | Amount of data |
|---|---|---|---|
| Header | 37H | 55 | 1 byte |
| Identifier | 2BH | 43 | 1 byte |
| Number of dots (*) | 30H–39H | 48–57 | 1~4 bytes |
| NUL | 00H | 0 | 1 byte |

(*) If slip is not selected as the active sheet or the printer cannot print on slip, the printer transmits the status “Number of dots is 0.”
When the slip is selected as active sheet and BOF sensor detects paper present, the printer transmits the status “Number of dots is 9999.”

[Note] • When this command is transmitted, the following status must not be transmitted until this status is received.

## GS w *n*

[Name] Set bar code width

[Format]

| | | | |
|---|---|---|---|
| ASCII | GS | w | *n* |
| Hex | 1D | 77 | *n* |
| Decimal | 29 | 119 | *n* |

[Range] $2 \le n \le 6$

[Default] $n = 3$

[Description]

- Sets the horizontal size of the bar code.

| | Multi-level bar code | Binary-level bar code | |
|---|---|---|---|
| *n* | Module width (mm) | Thin element width (mm) | Thick element width (mm) |
| 2 | 0.282 | 0.282 | 0.706 |
| 3 | 0.423 | 0.423 | 1.129 |
| 4 | 0.564 | 0.564 | 1.411 |
| 5 | 0.706 | 0.706 | 1.834 |
| 6 | 0.847 | 0.847 | 2.258 |

- Multi-level bar codes are as follows:
  UPC-A, UPC-E, JAN13 (EAN13), JAN8 (EAN8), CODE93, CODE128
- Binary-level bar codes are as follows:
  CODE39, ITF, CODABAR

### 6.4 Obsolete Commands

## GS ∗ *x y d1...dk* [obsolete command]

**GS ( L** <Function 83> or <Function 84>, which is the upward-compatible command replacing **GS ∗**, is recommended for use, since **GS ∗** is an obsolete command in the ESC/POS® command system.

[Name] Define downloaded bit image

[Format]

| | | | | | |
|---|---|---|---|---|---|
| ASCII | GS | ∗ | *x* | *y* | *d1...dk* |
| Hex | 1D | 2A | *x* | *y* | *d1...dk* |
| Decimal | 29 | 42 | *x* | *y* | *d1...dk* |

[Range]
$1 \le x \le 255$
$1 \le y \le 48$ (where $1 \le x \times y \le 1536$)
$0 \le d \le 255$
$k = x \times y \times 8$

[Description]
- Defines the downloaded bit image in the download graphic area.
  - *x* specifies the horizontal size as *x* bytes.
  - *y* specifies the vertical size as *y* bytes.
  - *d* specifies the defined data (column format).

## GS / *m* [obsolete command]

**GS ( L** <Function 85>, which is the upward-compatible command replacing **GS /**, is recommended for use, since **GS /** is an obsolete command in the ESC/POS® command system.

[Name] Print downloaded bit image

[Format]

| | | | |
|---|---|---|---|
| ASCII | GS | / | *m* |
| Hex | 1D | 2F | *m* |
| Decimal | 29 | 47 | *m* |

[Range] $0 \le m \le 3$, $48 \le m \le 51$

[Description]
- Prints downloaded bit image by the process of **GS ∗** using the mode specified by *m*.

| *m* | Mode | Enlargement in vertical direction | Enlargement in horizontal direction |
|---|---|---|---|
| 0, 48 | Normal | 1 | 1 |
| 1, 49 | Double-width | 1 | 2 |
| 2, 50 | Double-height | 2 | 1 |
| 3, 51 | Quadruple | 2 | 2 |

## GS Q 0 *m xL xH yL yH d1...dk* [obsolete command]

**GS ( L** <Function 113> and <Function 50>, which is the upward-compatible command replacing **GS Q 0**, is recommended for use, since **GS Q 0** is an obsolete command in the ESC/POS® command system.

[Name] Print variable vertical size bit image

[Format]

| | | | | | | | | | |
|---|---|---|---|---|---|---|---|---|---|
| ASCII | GS | Q | 0 | *m* | *xL* | *xH* | *yL* | *yH* | *d1...dk* |
| Hex | 1D | 51 | 30 | *m* | *xL* | *xH* | *yL* | *yH* | *d1...dk* |
| Decimal | 29 | 81 | 48 | *m* | *xL* | *xH* | *yL* | *yH* | *d1...dk* |

[Range]
$0 \le m \le 3$, $48 \le m \le 51$
$1 \le (xL + xH \times 256) \le 4256$ $(0 \le xL \le 255, 0 \le xH \le 12)$
$1 \le (yL + yH \times 256) \le 8$ $(1 \le yL \le 8, yH = 0)$
$0 \le d \le 255$
$k = (xL + xH \times 256) \times (yL + yH \times 256)$

[Description]
- Prints a variable vertical size bit image using the mode specified by *m*.

| *m* | Mode | Enlargement in vertical direction | Enlargement in horizontal direction |
|---|---|---|---|
| 0, 48 | Normal | 1 | 1 |
| 1, 49 | Double-width | 1 | 2 |
| 2, 50 | Double-height | 2 | 1 |
| 3, 51 | Quadruple | 2 | 2 |

- *xL*, *xH* specify the horizontal size as $(xL + xH \times 256)$ dots.
- *yL*, *yH* specify the vertical size as $(yL + yH \times 256)$ bytes.
- *d* specifies the defined data (column format).

## GS v 0 m *xL xH yL yH d1...dk* [obsolete command]

**GS ( L** <Function 112> and <Function 50>, which is the upward-compatible command replacing **GS v 0**, is recommended for use, since **GS v 0** is an obsolete command in the ESC/POS® command system.

[Name] Print raster bit image

[Format]

| | | | | | | | | | |
|---|---|---|---|---|---|---|---|---|---|
| ASCII | GS | v | 0 | *m* | *xL* | *xH* | *yL* | *yH* | *d1...dk* |
| Hex | 1D | 76 | 30 | *m* | *xL* | *xH* | *yL* | *yH* | *d1...dk* |
| Decimal | 29 | 118 | 48 | *m* | *xL* | *xH* | *yL* | *yH* | *d1...dk* |

[Range]
$0 \le m \le 3,\ 48 \le m \le 51$
$1 \le (xL + xH \times 256) \le 255$ $(1 \le xL \le 255,\ xH = 0)$
$1 \le (yL + yH \times 256) \le 4607$ $(0 \le yL \le 255,\ 0 \le yH \le 17)$
$0 \le d \le 255$
$k = (xL + xH \times 256) \times (yL + yH \times 256)$

[Description]
- Prints a raster bit image using the mode specified by *m*.

| *m* | Mode | Enlargement in vertical direction | Enlargement in horizontal direction |
|---|---|---|---|
| 0, 48 | Normal | 1 | 1 |
| 1, 49 | Double-width | 1 | 2 |
| 2, 50 | Double-height | 2 | 1 |
| 3, 51 | Quadruple | 2 | 2 |

- *xL*, *xH* specify the horizontal size as $(xL + xH \times 256)$ bytes.
- *yL*, *yH* specify the vertical size as $(yL + yH \times 256)$ dots.
- *d* specifies the defined data (raster format).

# APPENDIX A: MISCELLANEOUS NOTES

## A1. Precautions

1) Notes on using the ink cartridge

a) Keep ink cartridges out of the reach of children. Ink is harmful if swallowed.
b) Do not disassemble the ink cartridge.
c) The ink can permanently stain clothing.
d) Do not refill the ink cartridge. Spills can result, causing damage to the printer.
e) Do not apply petroleum benzine, paint thinner, toluene, or ketone-based solvents to the ink cartridge. These solvents may cause damage to plastic components.
f) The ink within the ink cartridge may freeze if stored at temperatures under 0°C {32°F}, but once thawed at temperatures over 5°C {41°F}, it can be used normally.
g) If water-repellent paper such as an art paper is used for printing, ink dries very slowly and the print may smear. Use paper that does not cause this problem.
h) Disposal handling must be in accordance with any relevant national or local laws, ordinances, and regulations.
i) The ink cartridge must not be used as the maintenance cartridge that is used for repair.
j) EPSON recommends the use of genuine EPSON ink cartridges. Other products not manufactured by EPSON may cause damage to your printer that is not covered by EPSON's warranties.
k) Be sure to use the specified ink cartridge. Otherwise, ink may leak or the printing may be affected.
l) Do not open the ink cartridge until you are ready to install it. If an opened cartridge is left out for an extended period of time, print quality may be adversely affected.
m) After installing an ink cartridge, use it up within 6 months. Leaving the same cartridge in the printer for more than about 6 months may result in degraded print quality.
n) Use the ink cartridge by the date indicated on the box containing the ink cartridge and on the ink cartridge itself.
o) Do not bump the ink supply port (the projecting part at the bottom of the ink cartridge). Doing so may cause ink to leak from the cartridge.
p) Once you begin using an ink cartridge, there will be a residue of ink around the ink supply port. When you remove the ink cartridge from the printer, avoid touching the ink supply port and be careful where you put the cartridge to avoid getting ink on your hands or other objects.
q) Be careful to avoid scratching the transparent window on the lower side of the ink cartridge or getting it dirty. Doing so may render the ink cartridge unusable.

2) Notes on installing and removing an ink cartridge

a) For good printing quality, do not remove the ink cartridge from its clear plastic packing until immediately before installing it.

b) When the ink cartridge is installed, make sure to push the ink cartridge in until it stops.

c) The ink supply needle in the ink cartridge holder that supplies ink to the printer is covered with ink. To avoid getting your fingers dirty, keep them out of the ink cartridge holder.

d) Before installing the ink cartridge, be sure to peel off the yellow color tape from the top of the ink cartridge. If the tape is not removed, printouts will contain missing dots. If this occurs, peel off the tape, then perform cleaning until the missing dots go away.

e) You must not remove any tape on which the EPSON logo is printed.

3) Notes on using the autocutter

a) The emergency cutter on the paper roll exit part is only for cutting paper, make sure not to touch the cutter blade. Otherwise, you may be injured.

b) When the paper roll cover is opened, it is possible to touch the blades of the autocutter. Make sure not to touch the cutter blade. Otherwise, you may be injured.

c) Do not insert your fingers into the paper exit, since the cutter blade is installed inside the paper exit. Otherwise, you may be injured.

4) Notes on handling the paper roll cover

a) Do not touch the plastic gears located on the left side in the front of the printer, and do not use excessive force when opening the paper roll cover.

b) When the paper is jammed, do not pull the jammed paper or use tools. Make sure to remove the paper by hand after opening the paper roll cover.

c) Do not open the printer cover while the printer is operating. Otherwise, the paper may be jammed.

5) Notes on cleaning the print head

a) The printer takes about one minute for initial ink filling when the printer is first used. Never turn the printer off during an initial ink filling operation. The POWER LED flashes during the ink filling operation; then it stays on when filling is finished.
If the printer is turned off during the ink filling operation, it is necessary to perform this ink filling operation again. This will waste ink.

b) It is recommended that the printer be left to operate by itself during initial ink filling operation, and that the interface reset not be performed.

c) Do not use the manual CLEANING button unless there is a problem with print quality.

d) When the POWER LED is flashing, the printer is in a cleaning or in an ink filling state. Do not open the printer cover or turn the printer off when the POWER LED is flashing. However, if the POWER LED flashes slowly after performing the power-off command (**DLE DC4** *fn* = 2), it is OK to turn the power off with the power button.

6) Notes on printing bar codes

a) When bar code reading is executed, the recognition rate may differ, depending on the paper material and the characteristics of the bar code reader.

b) When the bar code is printed, it is recommended to print the HRI characters also.

c) Note that the recognition rate for bar code reading may be affected by different paper materials, the characteristics of the bar code reader, or other factors. Therefore, design the program so that the HRI characters can also be recognized if the bar code is not readable.

d) If page mode is used while printing a bar code, all passes that include the bar code are printed using unidirectional printing and the normal mode. Since the print density varies according to print mode, it is recommended that all pages be printed in the normal mode.

e) When printing a ladder bar code, a minimum module width of 0.423 mm (**GS w** *n* = 3) is recommended.

f) Do not use ladder bar codes with cut sheets.

g) The user is responsible for securing appropriate quiet zones (the blank areas before and after the bar code that are required by the specifications for various bar code types).

7) Notes on printing a 2-dimensional bar code (PDF417)

a) When printing PDF417, it is recommended that the row height be set to 3~5 times the module width. It is also recommended that the overall height of the code be greater than about 5 mm {0.2"}.

b) If the page mode is used while printing a bar code, all passes that include the bar code are printed using unidirectional printing and the normal mode. Since the print density varies according to the print mode, it is recommended that all pages be printed in the normal mode.

c) A minimum module width of at least 0.423 mm (specifying *n* = 3 for **GS ( k** <Function 067>) is recommended when printing a 2-dimensional bar code in the 90° or 270° orientation.

d) Do not use 2-dimensional codes with cut sheets.

e) The user is responsible for securing appropriate PDF417 quiet zones (the blank areas above, below, and to the sides of the bar code that are required by the PDF417 specification).

8) Notes on cut sheet forms

a) Set cut sheet forms so that the edge is aligned flush with the right guide and the form stopper. If inserted diagonally, the paper cannot be clamped properly because slip sensing is not possible (by the TOF and BOF sensors). When inserting the paper, let go of it promptly once it is clamped by the printer.

b) Use **ESC f** to set the amount of time that the printer waits for paper insertion and the amount of time that it waits before starting operation after insertion of a cut sheet.

c) Use **DLE ENQ** (*n* = 3) to cancel the cut sheet insertion waiting time.

d) Once the cut sheet has been delivered, the slip LED flashes continually, and no further operation takes place until the cut sheet has been removed.

e) Use **GS r** (*n* = 3, 80) to check the amount of remaining print area on a cut sheet.

f) The slip part of the printer uses ink jet printing, and cannot be used with pressure-sensitive forms.

g) The slip part of this printer is for use only with single-sheet paper. Do not insert multi-part forms, as this may cause paper jams.

h) The paper feeding pitch will be shortened, if the paper feeding direction is changed, when the slip is selected as the paper source. Therefore, the user must consider this (**ESC K**, **ESC e**).

9) Notes on setting up the printer basically (Refer to Section 1.5.6, Installation).

a) The printer must be horizontal during operation.

b) Do not set the printer in a dusty place.

c) Protect the printer from impact. Otherwise, there may be printing problems.

d) Make sure that the cords or other foreign objects are not caught on the printer base when the printer is installed.

10) Notes on the power supply of the printer

a) The ERROR LED flashes if the power voltage rises above 26.4 V for a certain period of time, causing a high-voltage error, or if the power voltage drops below 21.6 V for a certain period of time, causing a low-voltage error.

b) When either a high- or low-voltage error occurs, turn off the power and unplug the power cable as soon as possible.

c) Do not turn on the external power supply until after connecting it to the power supply connector on the printer. Do not reverse the polarity of the external power supply. Doing so could destroy the printer circuit or the external power supply.

11) Notes on transporting the printer

a) Remove the ink cartridge from the printer before transporting it.

b) Do not turn the printer upside down during transport.

c) Do not transport an ink cartridge that has been unpacked from its envelope. Doing so could leak ink.

12) Notes on the customer display connector

a) Do not connect a telephone jack (RJ11) or the drawer kickout (DKD) connector plug to the customer display (DM-D) connector. Otherwise, the printer or the drawer may be damaged.

13) Others

a) Because this printer uses plated steel, the cutting edges are subject to rust. However, this does not affect the printer performance.

b) Because this printer is supported only on one side, do not apply excessive force to the printer case.

c) Do not place food or beverages such as coffee on the case of the printer.

## APPENDIX B: CHANGING THE INK CARTRIDGE

Follow the procedure below when changing the ink cartridge.

1) Check that the printer power is turned on. If the printer power is turned off, turn the power switch ON.
2) Check that the INK OUT LED on the printer is flashing or lit. When using 2 colors, determine which ink cartridge is empty from the INK OUT LED and remove the empty ink cartridge.
3) Open the ink cartridge cover.
4) Pull back the ink cartridge lever and pull it upwards. When using 2 colors, check which ink cartridge is empty from the INK OUT LED and remove the empty ink cartridge.
5) Take out the new ink cartridge from the box and the bag. Next, peel off the (yellow color) tape from the top of the ink cartridge. (Be sure to peel off the (yellow color) tape).
6) Insert the new cartridge label-side up. Push the upper side of the ink cartridge, and insert until you hear a click. Take special care to the direction of the ink cartridge. Also, do not push in forcefully.
7) Close the carriage cover.
8) The printer may start the ink changing process automatically. It takes approximately one minute, during which time the POWER LED flashes. During this operation, do not turn the printer power off. If the printer is turned off during the ink filling operation, it is necessary to perform this ink filling operation again. This will waste ink.
9) When the ink cartridge changing process is finished, the POWER LED stays on and the printer stands by for normal printing.

## APPENDIX C: INSTALLING OR REPLACING THE PAPER ROLL

Follow the procedure below when installing or replacing the paper roll.

1) Confirm that the printer power is ON. (If the power is OFF, turn the power ON)
2) Lift the paper ejection table upward and pull it toward the front of the printer; then open the paper roll cover.
3) After removing the core of the used paper roll, load a new paper roll. Load the paper roll so that the paper unrolls from the bottom.
4) Pull out the paper roll straight, and close the paper roll cover. The paper roll cover should be inserted until the cover is completely locked. (Afterwards, the printer feeds paper for approximately 52 mm automatically to put some slack in the paper.)

## APPENDIX D: ADJUSTING THE PAPER ROLL NEAR-END SENSOR LOCATION

The remaining detectable amount of paper on the paper roll varies with the inside and outside diameters of the paper core. The minimum detectable amount of paper on the paper roll can be set using the following method:

1) The inside diameter (ϕd) of the paper spool should be 10 mm {0.4"} or more.
2) Set paper roll diameter A to obtain the corresponding adjustment position from the table below.

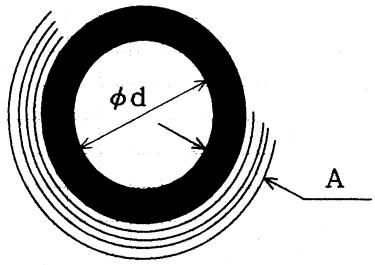


**Figure D.1 Paper Spool**

**Table D.1 Adjusting the detectable amount**

| A | Adjustment position |
|---|---|
| Approximately 10 mm | #1 |
| Approximately 8.5 mm | #2 |
| Approximately 7 mm | #3 |
| Approximately 5 mm | #4 |

NOTES:
1. Since diameter A corresponding to the adjustment position in the table is a calculated value, there may be some variations depending on the printer.
2. If a paper roll is used with an end mark at the paper end, the mark may stick, causing the paper to pull up. If this occurs, diameter A differs from the values in the table.
3. Be sure that the sensor lever operates smoothly after finishing the adjustment.
4. If the paper on the paper roll becomes loose due to the paper quality, the paper roll near-end sensor may operate incorrectly.

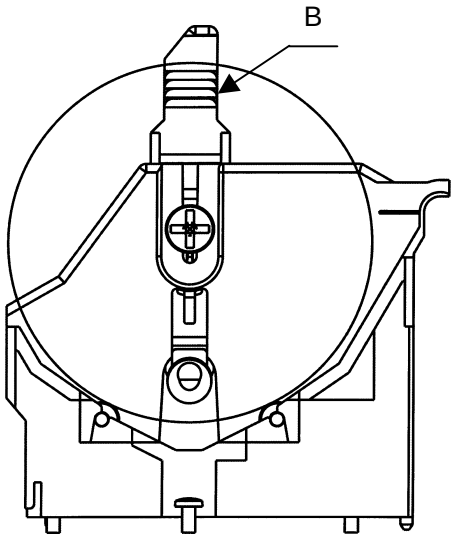


**Figure D.2 Paper Roll Near-end Sensor**

5. The adjustment must be performed as follows:
   - Loosen the detection adjustment screw so that the near-end adjustment holder can slide.
   - Then set position B of the near-end adjustment holder by aligning to the difference in level of the desired paper roll.

## APPENDIX E: DESCRIPTION OF THE MAINTENANCE COUNTERS

The printer has maintenance counters supported by software.

| Counter | Types of counter | Unit | Counter value | | Counter number | |
|---|---|---|---|---|---|---|
| | | | Acquire | Initialize | Hex | Decimal |
| Number of line feeds | Reset Possible | Lines | Possible | Possible | 1E | 30 |
| Average number of times of energizing the head for the 1st color | Reset possible | Shots | Possible | Possible | 1F | 31 |
| Average number of times of energizing the head for the 2nd color | Reset possible | Shots | Possible | Possible | 20 | 32 |
| Number of cartridge operations | Reset possible | No. of times | Possible | Possible | 21 | 33 |
| Number of pump motor operations | Reset possible | No. of times | Possible | Possible | 22 | 34 |
| Number of slip feeds | Reset possible | Lines | Possible | Possible | 23 | 35 |
| Number of autocutter operations | Reset possible | No. of times | Possible | Possible | 32 | 50 |
| Product operation time | Reset possible | Hours | Possible | Possible | 46 | 70 |
| Number of line feeds | Cumulative | Lines | Possible | Impossible | 9E | 158 |
| Average number of times of energizing the head for the 1st color | Cumulative | Shots | Possible | Impossible | 9F | 159 |
| Average number of times of energizing the head for the 2nd color | Cumulative | Shots | Possible | Impossible | A0 | 160 |
| Number of carriage operations | Cumulative | No. of times | Possible | Impossible | A1 | 161 |
| Number of pump motor operations | Cumulative | No. of times | Possible | Impossible | A2 | 162 |
| Number of slip feeds | Cumulative | Lines | Possible | Impossible | A3 | 163 |
| Number of autocutter operations | Cumulative | No. of times | Possible | Impossible | B2 | 178 |
| Product operation time | Cumulative | Hours | Possible | Impossible | C6 | 198 |

NOTES:
- All values of the maintenance counter are transmitted to the host PC with the **GS g 2** command.
- The counters that are possible to reset can be initialized (cleared to zero) with the **GS g 0** command.
- All counters count up for updating. If the counter value reaches the maximum number, the counter value (for a counter that is possible to reset) does not change until the counter is initialized.

| Counter | Counting method | Unit | Maximum value |
|---|---|---|---|
| The number of paper feed lines for roll paper | Counts a paper feed of 4.23 mm {1/6"} as one line (+1) when printing on the roll paper. | Lines | 143,165,576 |
| The average number of head shots for color 1 | Counts 64 shots of head driving as one shot (+1). | Shots | 4,294,967,295 |
| The average number of head shots for color 2 | Counts 64 shots of head driving as one shot (+1). | Shots | 4,294,967,295 |
| The number of head carriage movements | Counts the number of times of head carriage passing when printing | Times | 4,294,967,295 |
| The number of ink pumping | Counts the number of ink pumping times | Times | 4,294,967,295 |
| The number of paper feed lines for slip paper | Counts a paper feed of 4.23 mm {1/6"} as one line (+1) when printing on the slip. | Lines | 143,165,576 |
| The number of autocutter operations | Counts an autocutter operation (+1). | Times | 4,294,967,295 |
| Period of printer operation | Counts the number of hours power has been on. | Hours | 71,582,788 |

NOTES:
- Commands used after the maximum values in the table above are not included in the transmission data.
- If the printer is turned off without executing the power-off command (**DLE DC4** (*fn* = 2)), the values of the counters may be less than the actual ones.

## APPENDIX F: NOTES ON USING THE DRAWER KICK-OUT CONNECTOR

1) Drawer kick-out connector use conditions (refer to Section 2.2.3, Drawer Kick-out Connector)

Because drawer specifications differ depending on the manufacturer and the part number, make sure that the specifications of the drawer to be used meet the following conditions before connecting it to the drawer kick-out connector.

Any devices that do not satisfy all the following conditions must not be used.

[Conditions]

- A load, such as a drawer kick-out solenoid, must be provided between drawer kick-out connector pins 4 and 2 or between pins 4 and 5. (*1)
- When the drawer open/close signal (causes the open/close of the drawer) is used, a switch, such as a drawer, must be provided between drawer kick-out connector pins 3 and 6. (*2)
- The resistance of the load, such as for the drawer kick-out solenoid, must be 24 Ω or more, or the input current must be 1 A (24V) or less. (*3)
- Be sure to use drawer kick-out connector pin 4 (24 V power output) to drive the device. Never connect any other power supply to the drawer kick-out connector. (*4)

NOTES: (*1) Operating the printer with incorrectly installed devices voids the warranty.

(*2) Connecting devices other than the drawer open/close switch voids the warranty.

(*3) If a device with a resistance of less than 24 Ω or an input current of over 1 A is used, the resulting overcurrent may damage the device.

(*4) Connecting a power supply other than that specified voids the warranty.

# APPENDIX G: NOTES ON TURNING THE PRINTER'S POWER ON/OFF

## G.1 Power On Control

To avoid from wasting ink, in the printer that the reset signal is supplied from the host PC while the printer's mechanism is initialized at the power on, the printer initializing operation is controlled to be delayed after the reset signal is received (during this period, the POWER LED flashes and the maximum delay period is 2 minutes).

NOTES:
- If the power is turned off while initializing, the initialization of the mechanism is delayed at the next time the power is turned. If the power is turned off after finishing initializing, the initializing delay function as above is reset (no delay).
- If the printer goes offline due to the printer's cover open or other causes while the printer's mechanism is initialized at the power on, the initializing delay function may not work correctly. For this reason, do not make the printer become offline while the mechanism is initialized, or turn the power off after initializing, or reset the initializing delay function when the delay function becomes abnormal.

## G.2 Power Off Control

It is recommended to turn the power off only after executing the power-off command (**DLE DC4** *fn* = 2). If the power is turned off without executing the power-off command, the ink will be wasted since the cleaning is done when the printer is turned on the next time, or the ink nozzle will be clogged if unused period exceeds two weeks.

The following is an example of the printer power off process when the printer is turned off using the **DLE DC4** (*fn* = 2) command.

1) Performs the following procedure without interruption before the system is turned off.
   1. Executes **GS ( D *pL pH m a b*** (***pL***=3, ***pH*** =0, ***m*** =20, ***a*** =2, ***b*** =1)
   2. Executes **GS r *n*** (*n* =1)
2) Waits for the paper sensor status from the printer by the **GS r *n*** command.
3) Transmits **DLE DC4 *n a b*** (***fn*** =2, ***a*** =1, ***b*** =8)
4) Waits for the power off status.
   - The power off status is transmitted by the power-off sequence within 10 seconds after transmitting **DLE DC4 *n a b***.
   - If the power off status is not checked, waits for 10 seconds or more after transmitting **DLE DC4 *n a b***.
   - For the serial interface model, the printer status is transmitted regardless of the condition of the host.
   - For the bidirectional parallel interface model, after transmitting **DLE DC4 *n a b***, the printer is required to be ready for receiving data from the host.

   NOTE: The printer executes the software sequence, but the power is not cut.
5) Turn the system power (the host and the printer) off.

   NOTE: Do not execute a reset to the printer until the printer power is turned off after transmitting **DLE DC4** (*fn* = 2).

   * Do not perform the power-off command while the printer is cleaning.

## APPENDIX H: REPLACING THE PUMP UNIT AND THE INK SUPPLY UNIT

When the pump unit is near the end of life, a warning message is printed every time the external power supply is turned on. When the warning message is printed, that means that the mechanism has reached its end of life.

Printed messages:

Pump unit: “Caution: The pump unit must be replaced. Contact a qualified service person.”

## APPENDIX I: CHANGING THE PAPER WIDTH

It is possible to change the paper width of the paper roll for this printer. Selections can be made from 82.5 mm {3.25"}, 76 mm {2.99"}, 69.5 mm {2.74"}, and 57.5 mm {2.26"}. (The default setting is 76 mm {2.99"})

Change the paper width as follows.

1) Open the paper roll cover.
2) Unscrew the screw holding the guide (black, plastic part) on the left side of the paper roll holder.
3) Change the position of the guide part, aligning it with the width of the paper to be used.
4) Using the screw, fasten the guide.

NOTES:

- When changing the paper width, change the setting of the paper width memory switch (customized value) using **GS ( E** <Function 5>).
- When changing to a wider paper after using a narrow paper width, replacement of the autocutter is necessary because parts other than the paper cutter will deteriorate.

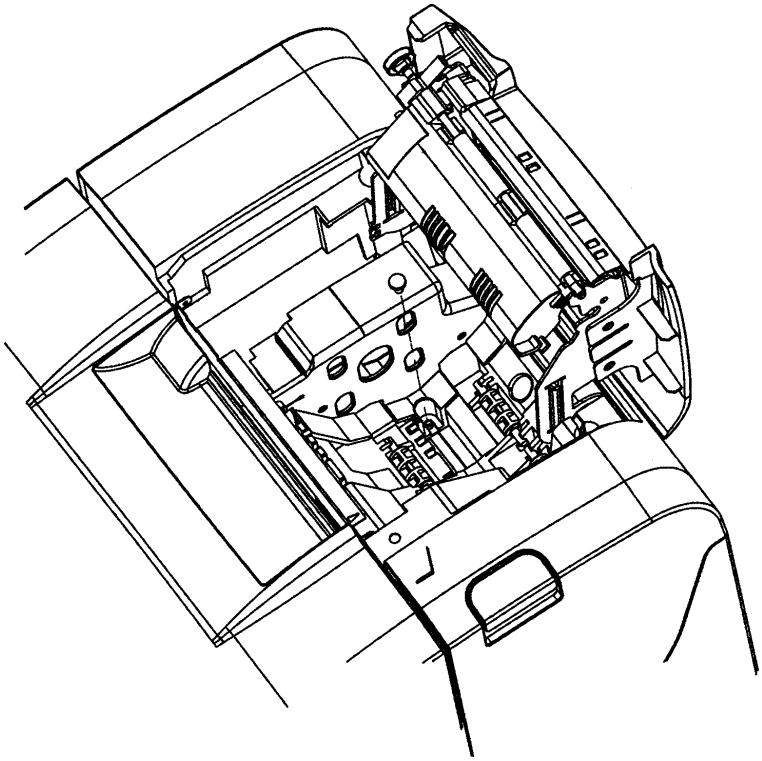

**Figure. I.1 Changing Paper Width**