Confidential

EPSON

Customer Display

DM-D210

Specification

STANDARD	
Rev. No.	F
Notes	

Copied Date	, ,
Copied by	

SEIKO EPSON CORPORATION

MATSUMOTO MINAMI PLANT
2070 KOTOBUKI KOAKA, MATSUMOTO-SHI, NAGANO, 399-8702 JAPAN
PHONE(0263)86-5353 FAX(0263)86-9925

Confidential

REVISION SHEET

The table below indicates which pages in this specification have been revised.
Before reading this specification, be sure you have the correct version of each page.

Revisions		Design Section			Sheet Rev. No.					
Rev.	Document	WRT	CHK	APL	Sheet	Rev.	Sheet	Rev.	Sheet	Rev.
A	Enactment	Takahashi	Kitabayashi	Ogasawara	I	E	18	E	42	F
B	Change	Takahashi	Kitabayashi	Ogasawara	II	E	19	E	43	E
C	Change	Takahashi	Kitabayashi	Ogasawara	III	E	20	E	44	E
D	Change	Takahashi	Tanimoto/Ito	Endo	IV	E	21	E	45	E
E	Change	Tanimo	Ito	Endo			22	E	46	E
F	Change	Tanimo	Ito	Miyagawa			23	E	47	E
							24	E	48	E
					1	E	25	E	49	E
					2	E	26	E	50	E
					3	F	27	E	51	E
					4	E	28	E	52	E
					5	E	29	E	53	E
					6	E	30	E	54	E
					7	E	31	E	55	E
					8	E	32	E	56	E
					9	E	33	E	57	E
					10	E	34	E	58	E
					11	E	35	E	59	E
					12	E	36	E	60	E
					13	E	37	E	61	E
					14	E	38	E	62	E
					15	E	39	E		
					16	E	40	E	App.1	E
					17	E	41	F		

DM-D210 Specification (STANDARD)	Cover	Rev. Sheet	Scope	General Descriptions	Table of Contents	Contents	Appendix	Total
	1	3	--	2	2	62	1	71

Confidential

REVISION SHEET

REV.	SHEET	CHANGED CONTENTS
B	3	1.7 Overall Specifications 1) Color Epson dark gray (added) 2) Dimensions and mass DP-505 (added)
	4, 5	1.9 Options 7) Attachment (added) Illustration (DP-505) (added)
	60	<Function03> US (E Msw10 $t = 0 \rightarrow n = 0$ Msw11 $R = 0 \rightarrow n = 0$ (corrected)
	61	<Function04> US (E Example (changed)
C	4, 5	1.9 Options 3) Stand and <Accessories> DP-210-1x2 (added)
	8	3.1 Option Stand Connector NOTE (added)
D	II	GENERAL DESCRIPTION 8) ….. and IM series. (added)
	III	Table of contents 4.1.3 Memory Switch (added)
	6	2.1 Interface Connector The base section ….. → The display main unit … (changed) 2.2.1 Signal Specifications (*2) (added)
	13	3.2.5 Stand-Alone Connection (added) NOTE
	17-1	Sheet No. 17 → 17-1 (changed)
	17-2	4.1.3 Memory Switch (added)
E	All	All page are renumbered due to a page deletion.
	2	1.3 Electrical Specifications PS-180 (added)
	3	1.7 Overall Specifications 1) Color …..and DP-110/DP-505 only → …..except DP-503 and DP-504 2) Dimensions and mass Height (in an extended use) (added)
	5	1.9 Options 1) Power supply unit PS-180 (added)
	8	Table 2.3.1 Connector Signal Assignments Pin number 2: Y type (deleted) Pin number 4: 1) (deleted), 2) → 1), 3) → 2) NOTES: (*1): …..Y-type connection (deleted)
	11	3.2.1 Connection diagram ….. or whether the printer is connected ….. (deleted) ….. or an Y-type (deleted) Table 3.2.1 Connection Types Y-type connection (deleted)

TITLE

DM-D210

Specification

(STANDARD)

Confidential

REVISION SHEET

REV.	SHEET	CHANGED CONTENTS
E	12	3.2.3 Pass through connection The pass through connection….. example). (deleted)
	-	3.2.4 Y-type connection (deleted)
	13	3.2.5 → 3.2.4 Stand-alone connection Figure 3.2.4 → Figure 3.2.3 NOTE (deleted)
	14	Table 3.3.1 Connector Signal Assignments Pin number 2: or Y type (deleted) Pin number 20: (*2) (deleted)
F	3	1.7 Overall Specifications Height of Display main Unit: 91 mm → 83 mm
	41, 42	ESC = *n* [Notes] • With the pass through connection, ….. (added)

TITLE

DM-D210

Specification

(STANDARD)

Confidential

CONFIDENTIALITY AGREEMENT

BY USING THIS DOCUMENT, YOU AGREE TO ABIDE BY THE TERMS OF THIS AGREEMENT. PLEASE RETURN THIS DOCUMENT IMMEDIATELY IF YOU DO NOT AGREE TO THESE TERMS.

1. This document contains confidential, proprietary information of Seiko Epson Corporation or its affiliates. You must keep such information confidential. If the user is a business entity or organization, you must limit disclosure to your employees, agents, and contractors who have a need to know and who are also bound by obligations of confidentiality.
2. On the earlier of (a) termination of your relationship with Seiko Epson, or (b) Seiko Epson's request, you must stop using the confidential information. You must then return or destroy the information, as directed by Seiko Epson.
3. If a court, arbitrator, government agency, or the like orders you to disclose any confidential information, you must immediately notify Seiko Epson. You agree to give Seiko Epson reasonable cooperation and assistance in resisting disclosure.
4. You may use confidential information only for the purpose of operating or servicing the products to which the document relates, unless you obtain the prior written consent of Seiko Epson for some other use.
5. Seiko Epson warrants that it has the right to disclose the confidential information. SEIKO EPSON MAKES NO OTHER WARRANTIES CONCERNING THE CONFIDENTIAL INFORMATION OR ANY OTHER INFORMATION IN THE DOCUMENT, INCLUDING (WITHOUT LIMITATION) ANY WARRANTY OF TITLE OR NON-INFRINGEMENT. Seiko Epson has no liability for loss or damage arising from or relating to your use of or reliance on the information in the document.
6. You may not reproduce, store, or transmit the confidential information in any form or by any means (electronic, mechanical, photocopying, recording, or otherwise) without the prior written permission of Seiko Epson.
7. Your obligations under this Agreement are in addition to any other legal obligations. Seiko Epson does not waive any right under this Agreement by failing to exercise it. The laws of Japan apply to this Agreement.

CAUTIONS

1. This document shall apply only to the product(s) identified herein.
2. No part of this document may be reproduced, stored in a retrieval system, or transmitted in any form or by any means, electronic, mechanical, photocopying, recording, or otherwise, without the prior written permission of Seiko Epson Corporation.
3. The contents of this document are subject to change without notice. Please contact us for the latest information.
4. While every precaution has been taken in the preparation of this document, Seiko Epson Corporation assumes no responsibility for errors or omissions.
5. Neither is any liability assumed for damages resulting from the use of the information contained herein.
6. Neither Seiko Epson Corporation nor its affiliates shall be liable to the purchaser of this product or third parties for damages, losses, costs, or expenses incurred by the purchaser or third parties as a result of: accident, misuse, or abuse of this product or unauthorized modifications, repairs, or alterations to this product, or (excluding the U.S.) failure to strictly comply with Seiko Epson Corporation's operating and maintenance instructions.
7. Seiko Epson Corporation shall not be liable against any damages or problems arising from the use of any options or any consumable products other than those designated as Original EPSON Products or EPSON Approved Products by Seiko Epson Corporation.

TRADEMARKS

EPSON® and ESC/POS® are registered trademarks of Seiko Epson Corporation.

General Notice: Other product and company names used herein are for identification purposes only and may be trademarks of their respective companies.

GENERAL DESCRIPTION

1. Application

   These specifications apply to the DM-D210 customer display.

2. Features

   1) Various expressions can be displayed on the 20-column by 2-line dot matrix.
   2) The vacuum fluorescent display provides a wide viewing angle, long life, high reliability, and high display quality.
   3) The green fluorescent color is easy on the eyes.
   4) The display panel is movable so that it can be adjusted for the best viewing angle (up, down, right, and left.)
   5) Control is based on the EPSON ESC/POS® standard command set, which provides good general utility and the following features:
      - User-defined characters can be downloaded.
      - Reverse characters can be specified.
      - The specified display area can be controlled by the window function.
      - International character sets are installed.
      - The specified data can be displayed repeatedly by executing a macro.
      - The brightness can be adjusted according to the ambient conditions.
      - Memory switches that enable customizing are installed.
   6) An interface based on EIA/TIA RS-232 is included, with baud rates from 2400 to 115200 bps. (bps: bits per second)
   7) Because a printer interface (based on RS-232) is included, it is possible to connect both a printer and the display by preparing only one port for RS-232 on the host computer side.
   8) The design matches EPSON printers (TM series and IM series).

Confidential

Table of Contents

1. GENERAL SPECIFICATIONS

1.1 Display Specifications

1) Vacuum fluorescent display
2) Number of characters: 40 (20 columns × 2 lines)
3) Display color: Green (505 nm)
4) Brightness: 700 cd/m^2

1.2 Character Specifications

1) Character type: Alphanumeric: 95
   International characters: 37
   Graphic characters: 128 × 12 pages
2) Character font: 5 × 7 dot matrix, comma, period, annunciator
3) Character size: 6.5 mm {.256"} × 11.3 mm {.445"}
   Refer to Figure 1.2.1 for details.
4) Character pitch: 9.9 mm {.390"}
   Refer to Figure 1.2.1 for details.

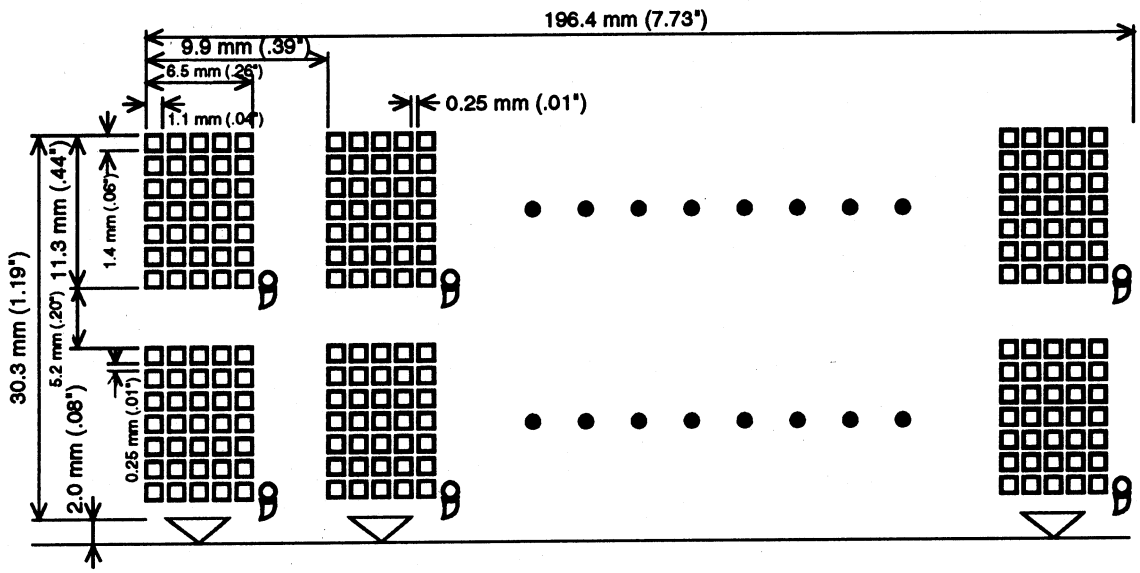

Figure 1.2.1 DM-D210 Character Dimensions

1.3 Electrical Specifications

1) Power supply types to be applied:
PS-170, PS-180, PA-6508, PB6509, PB-6510, PA-6511, PA-6513
(when the optional stand DP-210 is used)
2) Rated voltage: 11.4 - 48 VDC
3) Rated current: 0.4 A (max.) (at 11.4 V)

1.4 Environmental Conditions

1) Temperature: Operating: 5° to 40°C {41° to 104°F}
Storage: -10° to 50°C {14° to 122°F}
2) Humidity: Operating: 30% to 85% (non-condensing)
Storage: 30% to 90% (non-condensing)
3) Impact resistance: When unpacked: When one edge of the display is lifted and released from a 5 cm (1.97") height, visual inspection should detect no abnormalities. (Drop procedure should be repeated for four edges.)
When packed: After being dropped from a 90 cm {35.43"} height (one corner, three edges, six surfaces) when packed in the Epson standard container, visual inspection should detect no abnormalities in the internal or external conditions.

1.5 Reliability Specifications

1) MTBF: 20,000 hours (Vacuum fluorescent display only), a half-life period

1.6 Safety and EMI Standards Applied

1) Europe: CE marking: EN55022 class B
EN55024
Safety standard: EN60950
2) North America: EMI: FCC class A / ICES-003 class A
Safety standard: UL1950 / CSA C22.2 No.950
3) Japan: EMC: VCCI Class A
JEIDA-52
4) Oceania EMC: AS/NZS3548 (CISPR22) class B

1.7 Overall Specifications

1) Color: Epson cool white (for model-x0x)
Epson dark gray (for model-x1x, except DP-503 and DP-504)

2) Dimensions and mass

Items	Display main unit	Optional stand DP-210	Optional installation metal and pole DP-502	Optional installation base unit and pole DP-503	Optional installation base unit and pole DP-504	Optional installation metal and pole DP-505
Height (in the standard position) (mm)	83	53	260	248	129	260
Height (in the extended position) (mm)	--	283/ 403 (*1)	380	370	249	380
Width mm)	260	260	78	50	50	130
Depth (mm)	60	110	164	53	53	214
Mass (g)	600	385	264	116	60	418

*1: When extended maximum (except the protrusion)

3) Viewing angle: Maximum 36° (three steps and four positions)

4) Horizontal rotation: Maximum 330°

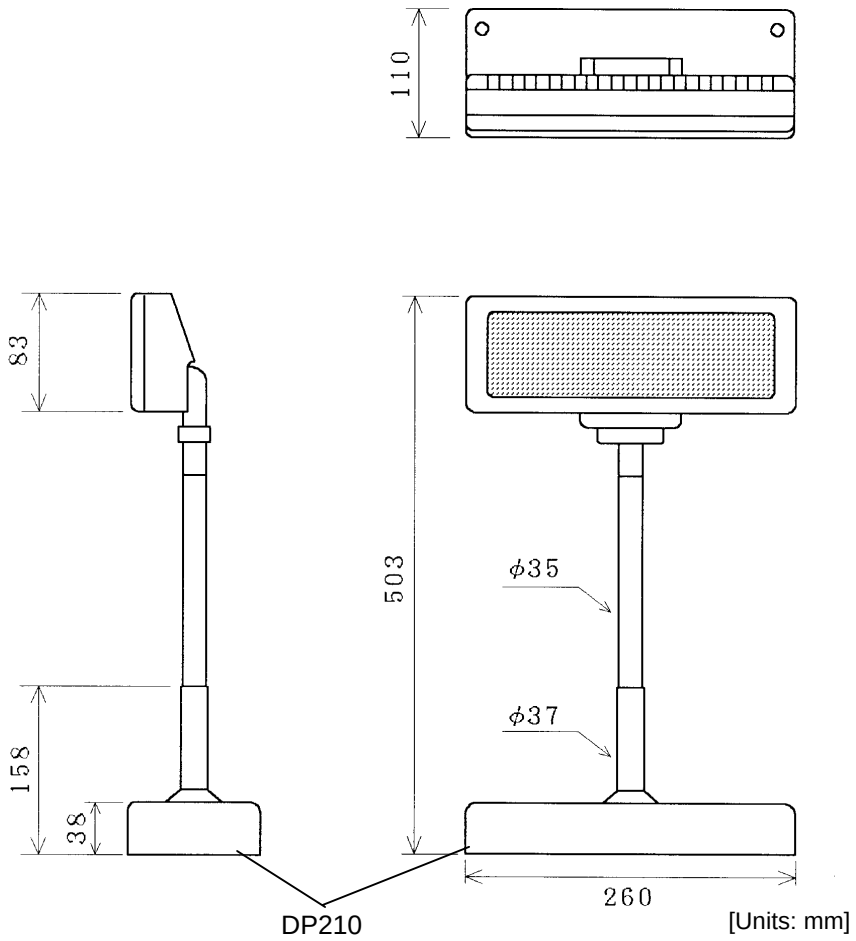

Figure 1.7.1 DM-D210 External Dimensions (Reference) with Option Stand

1.8 Accessories

1) Installation manual: For DM-D210 main unit 1

1.9 Options

1) Power supply unit: PS-170 / PS-180 (separately sold)
Refer to the PS-170 / PS-180 specification for detail.
2) Stand: DP-210 (-1x1, -1x2)
3) Installation metal: DP-502
4) Installation base unit: DP-503
5) Installation base unit: DP-504
6) Installation metal: DP-505 (for TM-T88 series and TM-U210 series)

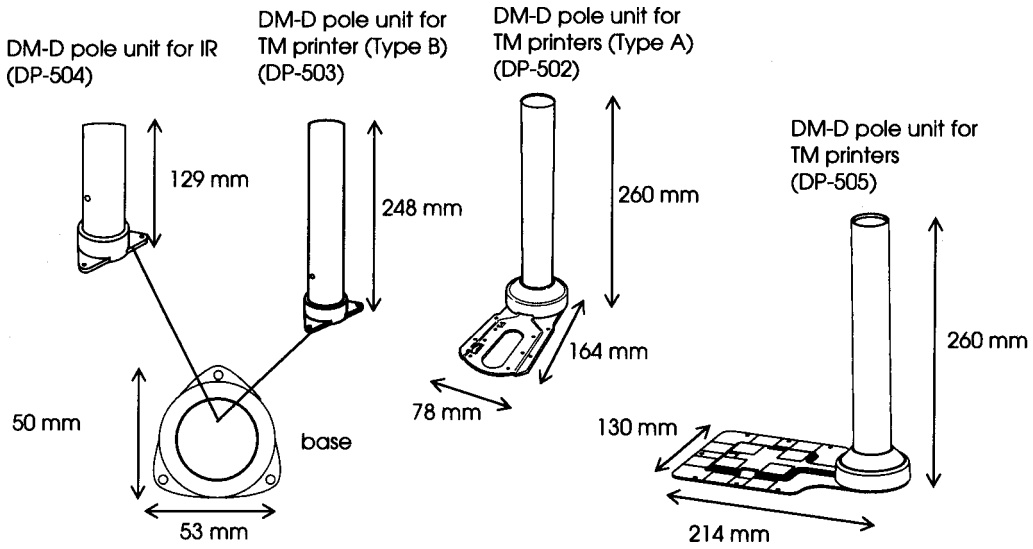

<Accessories>

	DP-210		DP-502	DP-503	DP-504	DP-505
	-1x1	-1x2				
Power extension cable	1	--	--	--	--	--
RS-232 connector fixing screw (milli-type)	4	--	--	--	--	--
Fixing screw (tapping, M3 × 10)	--	--	2	3	--	--
Fixing screw (M3 × 5)	--	--	2	--	--	--
Fixing screw	4	4	4	--	--	5
Rubber foot (square type)	--	--	4	--	--	--
Velcro tape set	--	--	1	--	--	1
Rubber foot (large)	--	--	2	--	--	--
Fixing screw (M3 × 8)	--	--	--	--	3	--
Extension pole	2	2	1	1	1	1
Rubber foot (small)	--	--	4	--	--	--
Main plate	--	--	1	--	--	--
Main plate installation screw	--	--	4	--	--	--
Stopper	--	--	1	--	--	--
Stopper installation screw	--	--	1	--	--	--
DM view angle fixing screw	--	--	1	--	--	--
Installation plate, A	--	--	1	--	--	--
Installation manual	1	--	--	--	--	1

2. INTERFACE

2.1 Interface Connector

The display main unit of the DM-D210 has an interface connector for connection to the DM-D stand and the option to install the DM-D210 to IM series or TM series. (refer to Figure 2.1.1)

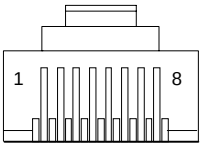

Figure 2.1.1 Interface Connector (Front)

2.2 Interface Specifications

2.2.1 Signal specifications

1) Specifications are based on EIA/TIA RS-232.

2) Data transmission method:	Serial	
3) Synchronization:	Synchronous	
4) Handshaking (*1):	DTR/DSR control	
5) Signal levels:	MARK = -3 to -15 V SPACE = +3 to +15 V	logic = “1” OFF logic = “0” ON
6) Baud rate (*1):	2400, 4800, 9600, 19200, 38400, 57600, 115200 bps (bps: bits per second)	
7) Data word length (*1):	7 bits, 8 bits	
8) Parity (*1):	None, odd, even	
9) Stop bits:	1 or more	

(*1) Selected by the DIP switches.

2.2.2 Communication Buffer size

80 bytes

2.3 Connector Signal Assignments

Table 2.3.1 Connector Signal Assignments

Pin Number	Signal Name	Signal Direction	Function
1	FG	-	Frame ground
2	TXD	Output	1) When the DM-D210 is connected with the data pass through (*1): Transmit data to the printer 2) When the DM-D210 is connected in a stand-alone: Transmit data to the host
3	RXD	Input	Receive data from the host
4	DSR	Input	This indicates whether the printer is ready to receive data. 1) When the DM-D210 is connected with a data pass through (*1): [MARK]: The printer is not ready to receive data [SPACE]: The printer is ready to receive data 2) When the DM-D210 is connected in a stand-alone: [MARK]: The host is not ready to receive data [SPACE]: The host is ready to receive data
5	DTR	Output	This indicates whether the display is ready to receive data (*2). [SPACE] The display can receive data. [MARK] The display cannot receive data. [DTR MARK] DTR goes to MARK under the following conditions: ① The period from when the power is turned on to when the display first becomes ready to receive data. ② When the self-test is executed. ③ When the remaining space in the receive buffer becomes 40 bytes or less (buffer-full state). ④ When [DSR MARK] is on, if the printer is selected by a peripheral device command. (When the DM-D210 is connected with the data pass through.) (*1) [DTR SPACE] DTR goes to SPACE under the following conditions: ① When the display first becomes ready to receive data after power-on. ② When the self-test has ended. ③ When the remaining space in the receive buffer becomes 50 bytes or more after it became 40 bytes or less once.
6	SG	-	Signal GND
7	PS	-	Power supply terminal
8	PG	-	Flyback line for power supply

NOTES: (*1) For the data pass through and the stand alone, refer to Section 3.2.1 Connection methods for detail.

(*2) [DTR MARK] can be set by the **US v** command. This case differs from the above-mentioned [DTR MARK].

3. SPECIFICATIONS OF OPTION STAND

3.1 Option Stand Connector

The option stand is equipped with an interface board, which has connectors for the display panel, printer, power supply, and host computer. (Refer to Figure 3.1.1)

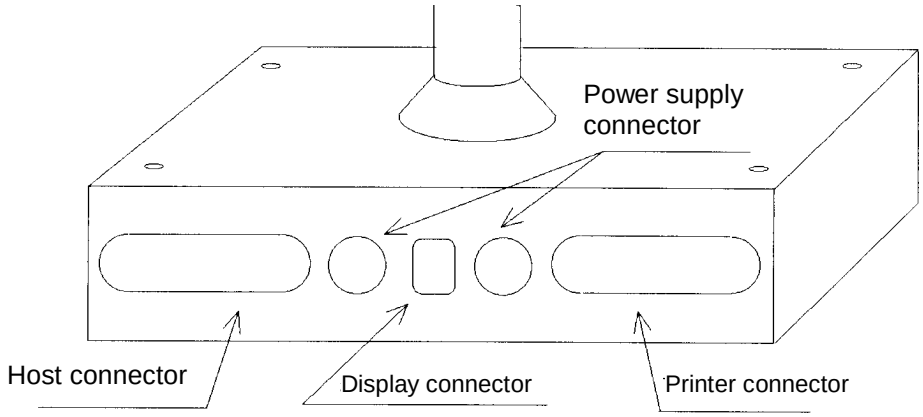

Figure 3.1.1 Option Stand Connector

NOTE: Figure 3.1.1 shows the DP-210-1x1.
The DP-210-1x2 does not include connectors and the interface board.

3.2 Option Stand Interface Specifications

3.2.1 Connection diagram

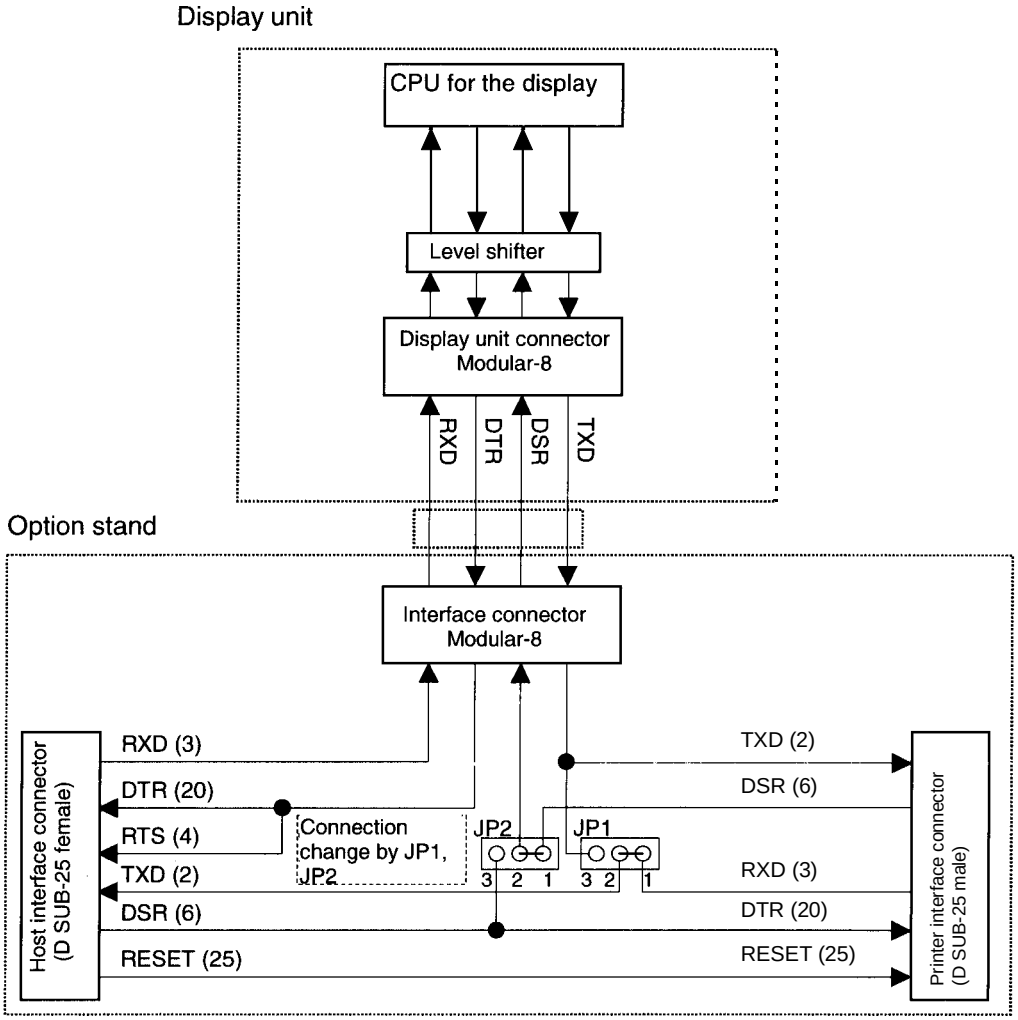

Figure 3.2.1 Interface Signal Connection Diagram

Some functions depend on the device's connection to the DM-D210, such as whether a printer is connected or not, with a data pass through, or stand alone connection.

Table 3.2.1 Connection Types

Connection type	JP1	JP2	Function
Data pass through (default setting)	1-2	1-2	Can connect a printer which does not support the **ESC =** command.
Stand-alone connection	2-3	2-3	No printer is connected.

3.2.2 Selection of the connection types.

Either the stand-alone connection or the data pass through connection can be selected with the setting of the jumper JP1 and JP2 on the option stand.

3.2.3 Pass through connection

Figure 3.2.2 shows the data flow when the DM-D210 is connected with the pass through.

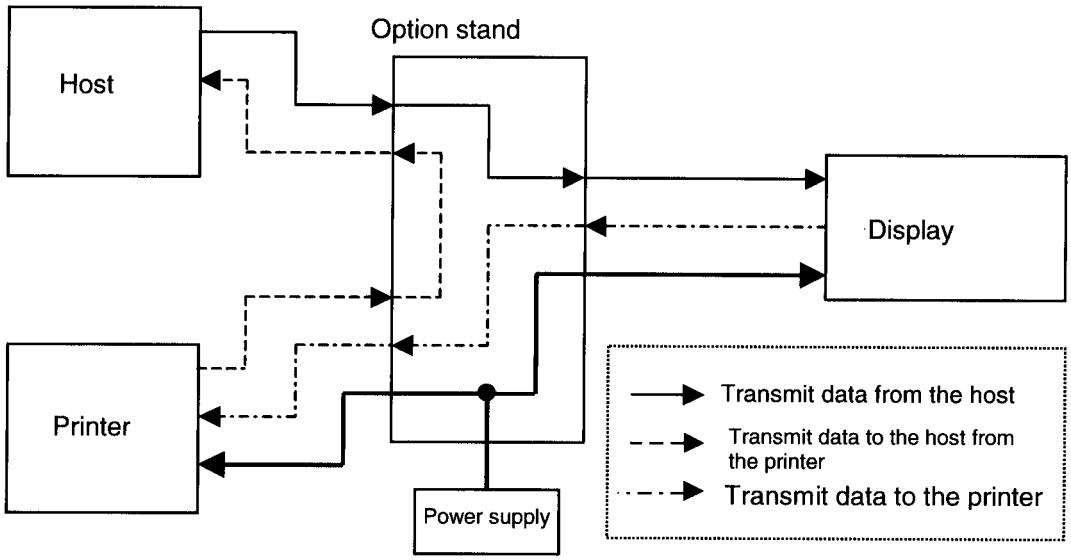

Figure 3.2.2 Data Flow in a Pass Through Connection

1) With the pass through connection, the DM-D210 stores the transmitted data from the host in the receive buffer of the DM-D210 and processes the data. In this case, the DM-D210 transmits only the data for the printer to the printer that is connected. On the other hand, the transmitted data from the printer is transmitted directly to the host, not through the mediation of the DM-D210.

2) The transmitted data from the host to the DM-D210 is identified whether it is data for the customer display or the data for the printer with the **ESC =** command.

3) The data communication condition of the DM-D210 with the DIP switch such as the baud rate, the data length, the parity must be same as the host and the printer.

3.2.4 Stand-alone connection

The stand-alone connection is required to connect the DM-D210, without the printer. In this case, the printer will be connected to another port than the one for the DM-D210.
Figure 3.2.3 shows the data flow when the DM-D210 is connected as a stand-alone.

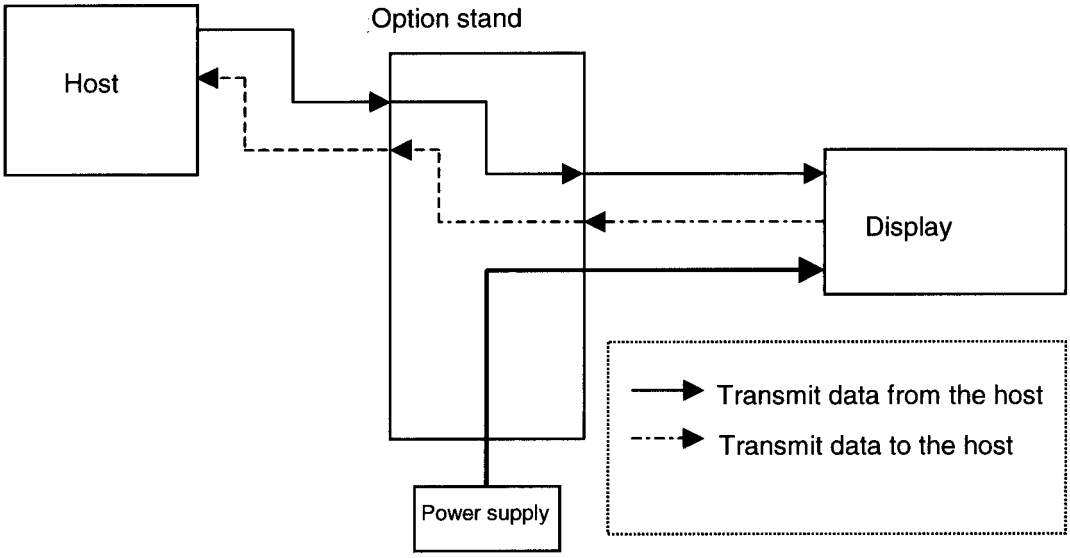

Figure 3.2.3 Data Flow in a Stand-alone Connection

1) With the stand-alone connection, the data from the host is transmitted to the DM-D210, and the data from the DM-D210 is transmitted to the host. Therefore, the status data of the DM-D210 can be transmitted to the host.

2) The stand-alone connection is effective only when the customer display is selected with **ESC = 2** and either of the user setting commands is used.

3.3 Host Interface

3.3.1 Host interface connector

The option stand provides the host interface connector (D-SUB 25 pin Female type) as shown in Figure 3.3.1.

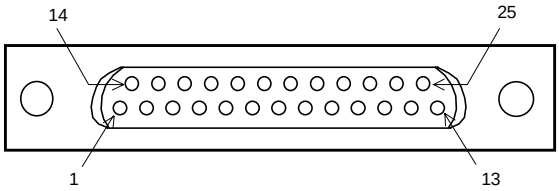

Figure 3.3.1 Host Interface Connector

3.3.2 Host interface connector signal assignments

Table 3.3.1 Connector Signal Assignments

Pin Number	Signal Name	Signal Direction	Function
1	FG	-	Frame ground
2	TXD	Output	1) When the DM-D210 is connected with a pass through connection: Transmit data to the host from the printer 2) When the DM-D210 is connected as a stand-alone: Transmit data to the host from the DM
3	RXD	Input	Receive data from the host (host → DM)
4 (*1)	RTS	Output	Same as DTR
6 (*2)	DSR	Input	Indicates whether the host is ready to receive data. [SPACE] The host is ready to receive data. [MARK] The host is not ready to receive data.
7	GND	--	Signal ground
20 (*1)	DTR	Output	This indicates whether the display is ready to receive data. [SPACE] The display can receive data. [MARK] The display cannot receive data. [DTR MARK] DTR goes to MARK under the following conditions: ① The period from when the power is turned on to when the display first becomes ready to receive data. ② When the self-test is executed. ③ When the remaining space in the receive buffer becomes 40 bytes or less (buffer-full state). ④ When [DSR MARK] is on, if the printer is selected by a peripheral device command. [DTR SPACE] DTR goes to SPACE under the following conditions: ① When the display first becomes ready to receive data after power-on. ② When the self-test has ended. ③ When the remaining space in the receive buffer becomes 50 bytes or more after it became 40 bytes or less once.
25	RESET	Input	Reset signal to the printer (host → printer)

NOTES (*1): Make sure to use either one of the RTS or the DTR terminal. Otherwise, the built-in RS-232 driver IC may be broken.

3.4 Printer Interface

3.4.1 Printer interface connector

The option stand provides the printer interface connector (D-SUB 25 pin Female type) as shown in Figure 3.4.1.

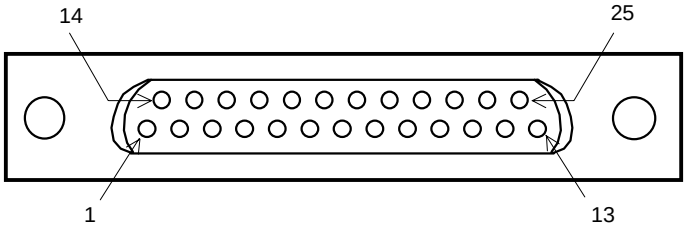

Figure 3.4.1 Printer Interface Connector

3.4.2 Printer interface connector signal assignments

Table 3.4.1 Connector Signal Assignments

Pin Number	Signal Name	Signal Direction	Function
1	FG	--	Frame GND
2	TXD	Output	Transmit data to the printer (DM → Printer)
3	RXD	Input	Receive data from the printer (printer → host)
6	DSR	Input	This indicates whether the display is ready to receive data from the printer. [SPACE] The printer can receive data. When the printer becomes ready to receive data the SPACE is output. [MARK] The printer cannot receive data. Even if the printer becomes ready to receive data, the MARK is not output.
7	GND	-	Signal GND
20	DTR	Output	Indicates whether the host is ready to receive data. [SPACE] The host is ready to receive data. [MARK] The host is not ready to receive data.
25	RESET	Output	Reset signal to the printer (host → printer)

3.5 Power Supply Connector

3.5.1 About the type of power supply connector

The base unit of the DM-D210 provides two types of the power supply connector. One is used for the input terminals from the external power supply and the other is used for supplying the power to the printer. Both connectors have the same electrical characteristics (signal functions, signal direction, signal level). These connectors can be used for the DM-D210 power supply connector to the display interface board or the power supply connector to the printer.

3.5.2 Power supply connector Pin Layout

Type: 3-pin locking type connector.

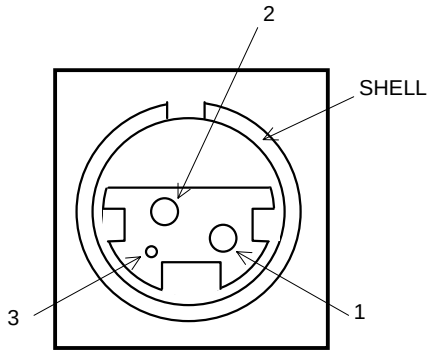

Figure 3.5.1 Power Supply Connector

Connector model: Interface board side: TCS7960-532010 (Hoshiden)

3.5.3 Power supply connector

Table 3.5.1 Power Supply Connector Pin Assignments

Pin Number	Signal Name	Signal Direction	Signal Function
1	+24V	--	Power supply line
2	GND	--	GND
3	NC	--	Unused
SHELL	FG	--	Frame GND

4. FUNCTIONAL SPECIFICATIONS

4.1 Switches

4.1.1 Power supply switch

1) Feature: A power supply switch is located on the bottom of the display panel.
2) Function: Turns the power supply on/off.

4.1.2 DIP switches

1) Feature: A DIP switch is located on the back of the display panel.
2) Functions: Refer to Tables 4.1.1 and 4.1.2. The DIP switch settings are read only when the power is turned on. Therefore, changing the settings while the power is on has no effect.

Table 4.1.1 DIP Switch 1

SW No.	Function	ON	OFF	Default
1-1	Data reception errors	Ignores	Displays “?”	OFF
1-2	Data length	7 bits	8 bits	OFF
1-3	Parity	Parity	No parity	OFF
1-4	Parity selection	Even parity	Odd parity	OFF
1-5	Change baud rate	(Refer to Table 4.1.2)		ON
1-6				OFF
1-7				ON
1-8	Self-test execution (*1)	Executes	Does not execute	OFF

(*1): When the power switch is turned on, the DM-D210 displays the continuous display pattern.

Table 4.1.2 DIP Switch 1 Transmission Speed Switching

SW1-5	SW1-6	SW1-7	Baud Rate (bps)
ON	ON	ON	2400
OFF	ON	ON	4800
ON	OFF	ON	9600
OFF	OFF	ON	19200
ON	ON	OFF	38400
OFF	ON	OFF	57600
ON	OFF	OFF	115200
OFF	OFF	OFF	(reserved)

(bps: bits per second)

4.1.3 Memory switch

The following settings other than the DIP switch can be changed by software as shown in Table 4.1.3. These settings become effective after the power is turned on or initialization is executed by a command.

Table 4.1.3 Memory Switch

Memory SW	Function	Default	Content to be set	Range to be set
Msw 10	Character code table section	n = 0	Page 0 is selected	0-5, 16-19, 254, 255
11	International character set selection	n = 0	U.S.A. is selected.	0-13
12	Brightness adjustment	n = 4	100 %	1-4
13	Selection of the peripheral devices	n = 2	Display is selected	1-3
14	Cursor display	Selected	Selected	0, 1, 48, 49
15	Display No.	0	0	0-255

NOTE: Refer to **US (E** <Function 03> in section 5.4 Command Details for details.

4.2. Commands List

Control commands for the DM-D210 are summarized in Table 4.2.1.

Table 4.2.1 DM-D210 Control Commands List

Command	Function
BS	Move cursor left
HT	Move cursor right
LF	Move cursor down
US LF	Move cursor up
HOM	Move cursor to home position
CR	Move cursor to left-most position
US CR	Move cursor to right-most position
US B	Move cursor to bottom position
US $	Move cursor to specified position
CLR	Clear display screen
CAN	Clear cursor line
ESC =	Select peripheral device(s)
ESC @	Initialize display
ESC %	Select/cancel user-defined character set
ESC &	Define user-defined characters
ESC ?	Cancel user-defined characters
ESC R	Select an international character set
ESC t	Select character code table
ESC W	Select/cancel window range
US MD1	Specify overwrite mode
US MD2	Specify vertical scroll mode
US MD3	Specify horizontal scroll mode
US E	Set display screen blink interval
US T	Set and display counter (time)
US U	Display counter (time)
US X	Brightness adjustment
US r	Turn reverse mode on/off
US v	Status confirmation by DTR signal
US @	Execute self-test
US :	Start/end macro definition
US ^	Execute macro
US .	Display period
US ,	Display comma
US ;	Display semicolon (period + comma)
US #	Turn annunciator on/off
US (A	Select display(s)
US (E	User set-up commands

4.3 Character Code Tables

4.3.1 Page 0 (PC437: U.S.A., standard Europe) (international character set: U.S.A.)

Table 4.3.1 Page 0 Indicated characters (00H-7FH)

	HEX	0	1	2	3	4	5	6	7
HEX	BIN	0000	0001	0010	0011	0100	0101	0110	0111
0	0000	NUL 00	16	SP 32	0 48	@ 64	P 80	` 96	p 112
1	0001	MD1 01	17	! 33	1 49	A 65	Q 81	a 97	q 113
2	0010	MD2 02	18	” 34	2 50	B 66	R 82	b 98	r 114
3	0011	MD3 03	19	# 35	3 51	C 67	S 83	c 99	s 115
4	0100	04	20	$ 36	4 52	D 68	T 84	d 100	t 116
5	0101	05	21	% 37	5 53	E 69	U 85	e 101	u 117
6	0110	06	22	& 38	6 54	F 70	V 86	f 102	v 118
7	0111	07	23	’ 39	7 55	G 71	W 87	g 103	w 119
8	1000	BS 08	CAN 24	(40	8 56	H 72	X 88	h 104	x 120
9	1001	HT 09	25	) 41	9 57	I 73	Y 89	i 105	y 121
A	1010	LF 10	26	* 42	: 58	J 74	Z 90	j 106	z 122
B	1011	HOM 11	ESC 27	+ 43	; 59	K 75	[91	k 107	{ 123
C	1100	CLR 12	28	, 44	< 60	L 76	\ 92	l 108	¦ 124
D	1101	CR 13	29	− 45	= 61	M 77	] 93	m 109	} 125
E	1110	14	30	. 46	> 62	N 78	^ 94	n 110	~ 126
F	1111	15	US 31	/ 47	? 63	O 79	_ 95	o 111	SP 127

NOTES: 1. Character codes from 00H (hexadecimal) to 7FH (hexadecimal) for each page are the same.

2. Some characters indicated by character codes from 00H to 7FH are changed by selecting the international character set. Refer to Section 4.3.13, International character set, for details.

(Continued)

Table 4.3.2 Page 0 Indicated Characters (80H–FFH)

	HEX	8	9	A	B	C	D	E	F
HEX	BIN	1000	1001	1010	1011	1100	1101	1110	1111
0	0000	Ç 128	É 144	á 160	░ 176	└ 192	╨ 208	α 224	≡ 240
1	0001	ü 129	æ 145	í 161	▒ 177	┴ 193	╤ 209	ß 225	± 241
2	0010	é 130	Æ 146	ó 162	▓ 178	┬ 194	╥ 210	Γ 226	≥ 242
3	0011	â 131	ô 147	ú 163	│ 179	├ 195	╙ 211	π 227	≤ 243
4	0100	ä 132	ö 148	ñ 164	┤ 180	─ 196	╘ 212	Σ 228	⌠ 244
5	0101	à 133	ò 149	Ñ 165	╡ 181	┼ 197	╒ 213	σ 229	⌡ 245
6	0110	å 134	û 150	ª 166	╢ 182	╞ 198	╓ 214	µ 230	÷ 246
7	0111	ç 135	ù 151	º 167	╖ 183	╟ 199	╫ 215	τ 231	≈ 247
8	0100	ê 136	ÿ 152	¿ 168	╕ 184	╚ 200	╪ 216	Φ 232	° 248
9	0001	ë 137	Ö 153	⌐ 169	╣ 185	╔ 201	┘ 217	θ 233	• 249
A	1010	è 138	Ü 154	¬ 170	║ 186	╩ 202	┌ 218	Ω 234	· 250
B	1011	ï 139	¢ 155	½ 171	╗ 187	╦ 203	█ 219	δ 235	√ 251
C	1100	î 140	£ 156	¼ 172	╝ 188	╠ 204	▄ 220	∞ 236	n 252
D	1101	ì 141	¥ 157	¡ 173	╜ 189	═ 205	▌ 221	ø 237	² 253
E	1110	Ä 142	₧ 158	« 174	╛ 190	╬ 206	▐ 222	∈ 238	■ 254
F	1111	Å 143	ƒ 159	» 175	┐ 191	╧ 207	▀ 223	∩ 239	SP 255

4.3.2 Page 1 (Katakana)

Table 4.3.3 Page 1 Indicated Characters (80H-FFH)

	HEX	8	9	A	B	C	D	E	F
HEX	BIN	1000	1001	1010	1011	1100	1101	1110	1111
0	0000	▬ 128	▌ 144	SP 160	ー 176	タ 192	ミ 208	□ 224	日 240
1	0001	▬ 129	▌ 145	。 161	ア 177	チ 193	ム 209	■ 225	月 241
2	0010	▬ 130	▌ 146	「 162	イ 178	ツ 194	メ 210	■ 226	火 242
3	0011	▬ 131	▌ 147	」 163	ウ 179	テ 195	モ 211	○ 227	水 243
4	0100	▬ 132	▌ 148	、 164	エ 180	ト 196	ヤ 212	● 228	木 244
5	0101	▬ 133	▒ 149	・ 165	オ 181	ナ 197	ユ 213	◇ 229	金 245
6	0110	▬ 134	▒ 150	ヲ 166	カ 182	ニ 198	ヨ 214	◆ 230	土 246
7	0111	▬ 135	→ 151	ァ 167	キ 183	ヌ 199	ラ 215	◆ 231	年 247
8	1000	▬ 136	← 152	ィ 168	ク 184	ネ 200	リ 216	▶ 232	円 248
9	1001	▬ 137	↑ 153	ゥ 169	ケ 185	ノ 201	ル 217	◀ 233	分 249
A	1010	▬ 138	↓ 154	ェ 170	コ 186	ハ 202	レ 218	▲ 234	人 250
B	1011	▬ 139	× 155	ォ 171	サ 187	ヒ 203	ロ 219	▼ 235	大 251
C	1100	▌ 140	÷ 156	ャ 172	シ 188	フ 204	ワ 220	≪ 236	中 252
D	1101	▌ 141	± 157	ュ 173	ス 189	ヘ 205	ン 221	≫ 237	小 253
E	1110	▌ 142	≤ 158	ョ 174	セ 190	ホ 206	゛ 222	½ 238	〒 254
F	1111	▌ 143	≥ 159	ッ 175	ソ 191	マ 207	゜ 223	¼ 239	℃ 255

4.3.3 Page 2 (PC850: multilingual)

Table 4.3.4 Page 2 Indicated Characters (80H-FFH)

	HEX	8	9	A	B	C	D	E	F
HEX	BIN	1000	1001	1010	1011	1100	1101	1110	1111
0	0000	Ç 128	É 144	á 160	░ 176	└ 192	ð 208	Ó 224	— 240
1	0001	ü 129	æ 145	í 161	▒ 177	┴ 193	Ð 209	ß 225	± 241
2	0010	é 130	Æ 146	ó 162	▓ 178	┬ 194	Ê 210	Ô 226	‗ 242
3	0011	â 131	ô 147	ú 163	│ 179	├ 195	Ë 211	Ò 227	¾ 243
4	0100	ä 132	ö 148	ñ 164	┤ 180	─ 196	È 212	õ 228	¶ 244
5	0101	à 133	ò 149	Ñ 165	Á 181	┼ 197	ı 213	Õ 229	§ 245
6	0110	å 134	û 150	ª 166	Â 182	ã 198	Í 214	µ 230	÷ 246
7	0111	ç 135	ù 151	º 167	À 183	Ã 199	Î 215	þ 231	¸ 247
8	1000	ê 136	ÿ 152	¿ 168	© 184	╚ 200	Ï 216	Þ 232	° 248
9	1001	ë 137	Ö 153	® 169	╣ 185	╔ 201	┘ 217	Ú 233	¨ 249
A	1010	è 138	Ü 154	¬ 170	║ 186	╩ 202	┌ 218	Û 234	· 250
B	1011	ï 139	ø 155	½ 171	╗ 187	╦ 203	█ 219	Ù 235	¹ 251
C	1100	î 140	£ 156	¼ 172	╝ 188	╠ 204	▄ 220	ý 236	³ 252
D	1101	ì 141	Ø 157	¡ 173	¢ 189	═ 205	¦ 221	Ý 237	² 253
E	1110	Ä 142	× 158	« 174	¥ 190	╬ 206	Ì 222	¯ 238	■ 254
F	1111	Å 143	ƒ 159	» 175	┐ 191	¤ 207	▀ 223	´ 239	SP 255

4.3.4 Page 3 (PC860: Portuguese)

Table 4.3.5 Page 3 Indicated Characters (80H-FFH)

	HEX	8	9	A	B	C	D	E	F
HEX	BIN	1000	1001	1010	1011	1100	1101	1110	1111
0	0000	Ç 128	É 144	á 160	░ 176	└ 192	╨ 208	α 224	≡ 240
1	0001	ü 129	À 145	í 161	▒ 177	┴ 193	╤ 209	ß 225	± 241
2	0010	é 130	È 146	ó 162	▓ 178	┬ 194	╥ 210	Γ 226	≥ 242
3	0011	â 131	ô 147	ú 163	│ 179	├ 195	╙ 211	π 227	≤ 243
4	0100	ã 132	õ 148	ñ 164	┤ 180	─ 196	╘ 212	Σ 228	⌠ 244
5	0101	à 133	ò 149	Ñ 165	╡ 181	┼ 197	╒ 213	σ 229	⌡ 245
6	0110	Á 134	Ú 150	ª 166	╢ 182	╞ 198	╓ 214	µ 230	÷ 246
7	0111	ç 135	ù 151	º 167	╖ 183	╟ 199	╫ 215	τ 231	≈ 247
8	1000	ê 136	Ì 152	¿ 168	╕ 184	╚ 200	╪ 216	Φ 232	° 248
9	1001	Ê 137	Õ 153	⌐ 169	╣ 185	╔ 201	┘ 217	Θ 233	• 249
A	1010	è 138	Ü 154	¬ 170	║ 186	╩ 202	┌ 218	Ω 234	· 250
B	1011	í 139	¢ 155	½ 171	╗ 187	╦ 203	█ 219	δ 235	√ 251
C	1100	Ô 140	£ 156	¼ 172	╝ 188	╠ 204	▄ 220	∞ 236	n 252
D	1101	ì 141	Ù 157	¡ 173	╜ 189	═ 205	▌ 221	ø 237	² 253
E	1110	Ã 142	₧ 158	« 174	╛ 190	╬ 206	▐ 222	∈ 238	■ 254
F	1111	Â 143	Ó 159	» 175	┐ 191	╧ 207	▀ 223	∩ 239	SP 255

4.3.5 Page 4 (PC863: Canadian-French)

Table 4.3.6 Page 4 Indicated Characters (80H-FFH)

	HEX	8	9	A	B	C	D	E	F
HEX	BIN	1000	1001	1010	1011	1100	1101	1110	1111
0	0000	Ç 128	É 144	¦ 160	░ 176	└ 192	╨ 208	α 224	≡ 240
1	0001	ü 129	È 145	´ 161	▒ 177	┴ 193	╤ 209	β 225	± 241
2	0010	é 130	Ê 146	ó 162	▓ 178	┬ 194	╥ 210	Γ 226	≥ 242
3	0011	â 131	ô 147	ú 163	│ 179	├ 195	╙ 211	π 227	≤ 243
4	0100	Â 132	Ë 148	¨ 164	┤ 180	─ 196	╘ 212	Σ 228	⌠ 244
5	0101	à 133	Ï 149	¸ 165	╡ 181	┼ 197	╒ 213	σ 229	⌡ 245
6	0110	¶ 134	û 150	³ 166	╢ 182	╞ 198	╓ 214	µ 230	÷ 246
7	0111	ç 135	ù 151	‾ 167	╖ 183	╟ 199	╫ 215	τ 231	≈ 247
8	0000	ê 136	¤ 152	Î 168	╕ 184	╚ 200	╪ 216	Φ 232	° 248
9	0001	ë 137	Ô 153	⌐ 169	╣ 185	╔ 201	┘ 217	θ 233	• 249
A	0010	è 138	Ü 154	¬ 170	║ 186	╩ 202	┌ 218	Ω 234	· 250
B	0011	ï 139	¢ 155	½ 171	╗ 187	╦ 203	█ 219	δ 235	√ 251
C	0100	î 140	£ 156	¼ 172	╝ 188	╠ 204	▄ 220	∞ 236	n 252
D	0101	ì 141	Ù 157	¾ 173	╜ 189	═ 205	▌ 221	ø 237	² 253
E	0110	Ä 142	Û 158	« 174	╛ 190	╬ 206	▐ 222	∈ 238	■ 254
F	0111	§ 143	ƒ 159	» 175	┐ 191	╧ 207	▀ 223	∩ 239	SP 255

4.3.6 Page 5 (PC865: Nordic)

Table 4.3.7 Page 5 Indicated Characters (80H-FFH)

	HEX	8	9	A	B	C	D	E	F
HEX	BIN	1000	1001	1010	1011	1100	1101	1110	1111
0	0000	Ç 128	É 144	á 160	░ 176	└ 192	╨ 208	α 224	≡ 240
1	0001	ü 129	æ 145	í 161	▒ 177	┴ 193	╤ 209	ß 225	± 241
2	0010	é 130	Æ 146	ó 162	▓ 178	┬ 194	╥ 210	Γ 226	≥ 242
3	0011	â 131	ô 147	ú 163	│ 179	├ 195	╙ 211	π 227	≤ 243
4	0100	ä 132	ö 148	ñ 164	┤ 180	─ 196	╘ 212	Σ 228	⌠ 244
5	0101	à 133	ò 149	Ñ 165	╡ 181	┼ 197	╒ 213	σ 229	⌡ 245
6	0110	å 134	û 150	ª 166	╢ 182	╞ 198	╓ 214	µ 230	÷ 246
7	0111	ç 135	ù 151	º 167	╖ 183	╟ 199	╫ 215	τ 231	≈ 247
8	1000	ê 136	ÿ 152	¿ 168	╕ 184	╚ 200	╪ 216	Φ 232	° 248
9	1001	ë 137	Ö 153	⌐ 169	╣ 185	╔ 201	┘ 217	θ 233	• 249
A	1010	è 138	Ü 154	¬ 170	║ 186	╩ 202	┌ 218	Ω 234	· 250
B	1011	ï 139	ø 155	½ 171	╗ 187	╦ 203	█ 219	δ 235	√ 251
C	1100	î 140	£ 156	¼ 172	╝ 188	╠ 204	▄ 220	∞ 236	n 252
D	1101	ì 141	Ø 157	¡ 173	╜ 189	═ 205	▌ 221	ø 237	² 253
E	1110	Ä 142	Pt 158	« 174	╛ 190	╬ 206	▐ 222	∈ 238	■ 254
F	1111	Å 143	ƒ 159	¤ 175	┐ 191	╧ 207	▀ 223	∩ 239	SP 255

4.3.7 Page 16 (WPC1252)

Table 4.3.8 Page16 Indicated Characters (80H–FFH)

	HEX	8	9	A	B	C	D	E	F
HEX	BIN	1000	1001	1010	1011	1100	1101	1110	1111
0	0000	€ 128	144	NBSP 160	° 176	À 192	Đ 208	à 224	ð 240
1	0001	129	‘ 145	¡ 161	± 177	Á 193	Ñ 209	á 225	ñ 241
2	0010	‚ 130	’ 146	¢ 162	² 178	Â 194	Ò 210	â 226	ò 242
3	0011	ƒ 131	“ 147	£ 163	³ 179	Ã 195	Ó 211	ã 227	ó 243
4	0100	„ 132	” 148	¤ 164	´ 180	Ä 196	Ô 212	ä 228	ô 244
5	0101	… 133	• 149	¥ 165	µ 181	Å 197	Õ 213	å 229	õ 245
6	0110	† 134	– 150	¦ 166	¶ 182	Æ 198	Ö 214	æ 230	ö 246
7	0111	‡ 135	— 151	§ 167	· 183	Ç 199	× 215	ç 231	÷ 247
8	1000	ˆ 136	˜ 152	¨ 168	¸ 184	È 200	Ø 216	è 232	ø 248
9	1001	‰ 137	™ 153	© 169	¹ 185	É 201	Ù 217	é 233	ù 249
A	1010	Š 138	š 154	ª 170	º 186	Ê 202	Ú 218	ê 234	ú 250
B	1011	‹ 139	› 155	« 171	» 187	Ë 203	Û 219	ë 235	û 251
C	1100	Œ 140	œ 156	¬ 172	¼ 188	Ì 204	Ü 220	ì 236	ü 252
D	1101	141	157	- 173	½ 189	Í 205	Ý 221	í 237	ý 253
E	1110	Ž 142	ž 158	® 174	¾ 190	Î 206	Þ 222	î 238	þ 254
F	1111	143	Ÿ 159	¯ 175	¿ 191	Ï 207	ß 223	ï 239	ÿ 255

4.3.8 Page 17 (PC866: Cyrillic2)

Table 4.3.9 Page17 Indicated Characters (80H–FFH)

	HEX	8	9	A	B	C	D	E	F
HEX	BIN	1000	1001	1010	1011	1100	1101	1110	1111
0	0000	А 128	Р 144	а 160	176	192	208	р 224	Ё 240
1	0001	Б 129	С 145	б 161	177	193	209	с 225	ё 241
2	0010	В 130	Т 146	в 162	178	194	210	т 226	Є 242
3	0011	Г 131	У 147	г 163	179	195	211	у 227	є 243
4	0100	Д 132	Ф 148	д 164	180	196	212	ф 228	Ї 244
5	0101	Е 133	Х 149	е 165	181	197	213	х 229	ї 245
6	0110	Ж 134	Ц 150	ж 166	182	198	214	ц 230	Ў 246
7	0111	З 135	Ч 151	з 167	183	199	215	ч 231	ў 247
8	1000	И 136	Ш 152	и 168	184	200	216	ш 232	° 248
9	1001	Й 137	Щ 153	й 169	185	201	217	щ 233	• 249
A	1010	К 138	Ъ 154	к 170	186	202	218	ъ 234	· 250
B	1011	Л 139	Ы 155	л 171	187	203	219	ы 235	√ 251
C	1100	М 140	Ь 156	м 172	188	204	220	ь 236	№ 252
D	1101	Н 141	Э 157	н 173	189	205	221	э 237	¤ 253
E	1110	О 142	Ю 158	о 174	190	206	222	ю 238	■ 254
F	1111	П 143	Я 159	п 175	191	207	223	я 239	(RSP) 255

4.3.9 Page 18 (PC852: Latin2)

Table 4.3.10 Page18 Indicated Characters (80H–FFH)

	HEX	8	9	A	B	C	D	E	F
HEX	BIN	1000	1001	1010	1011	1100	1101	1110	1111
0	0000	Ç 128	É 144	á 160	176	192	đ 208	Ó 224	(สีเทา) 240
1	0001	ü 129	Ĺ 145	í 161	177	193	Đ 209	ß 225	˝ 241
2	0010	é 130	ĺ 146	ó 162	178	194	Ď 210	Ô 226	˛ 242
3	0011	â 131	ô 147	ú 163	179	195	Ë 211	Ń 227	ˇ 243
4	0100	ä 132	ö 148	Ą 164	180	196	ď 212	ń 228	˘ 244
5	0101	ů 133	Ľ 149	ą 165	Á 181	197	Ň 213	ň 229	§ 245
6	0110	ć 134	ľ 150	Ž 166	Â 182	Ă 198	Í 214	Š 230	÷ 246
7	0111	ç 135	Ś 151	ž 167	Ě 183	ă 199	Î 215	š 231	¸ 247
8	1000	ł 136	ś 152	Ę 168	Ş 184	200	ě 216	Ŕ 232	° 248
9	1001	ë 137	Ö 153	ę 169	185	201	217	Ú 233	¨ 249
A	1010	Ő 138	Ü 154	170	186	202	218	ŕ 234	• 250
B	1011	ő 139	Ť 155	ź 171	187	203	219	Ũ 235	ũ 251
C	1100	î 140	ť 156	Č 172	188	204	220	ý 236	Ř 252
D	1101	Ź 141	Ł 157	ş 173	Ż 189	205	Ţ 221	Ý 237	ř 253
E	1110	Ä 142	× 158	« 174	ż 190	206	Ů 222	ţ 238	■ 254
F	1111	Ć 143	č 159	» 175	191	¤ 207	223	´ 239	(RSP) 255

4.3.10 Page19 (PC858: Euro)

Table 4.3.11 Page19 Indicated Characters (80H–FFH)

	HEX	8	9	A	B	C	D	E	F
HEX	BIN	1000	1001	1010	1011	1100	1101	1110	1111
0	0000	Ç 128	É 144	á 160	░ 176	└ 192	ð 208	Ó 224	— 240
1	0001	ü 129	æ 145	í 161	▒ 177	┴ 193	Ð 209	ß 225	± 241
2	0010	é 130	Æ 146	ó 162	▓ 178	┬ 194	Ê 210	Ô 226	‗ 242
3	0011	â 131	ô 147	ú 163	│ 179	├ 195	Ë 211	Ò 227	¾ 243
4	0100	ä 132	ö 148	ñ 164	┤ 180	─ 196	È 212	õ 228	¶ 244
5	0101	à 133	ò 149	Ñ 165	Á 181	┼ 197	€ 213	Õ 229	§ 245
6	0110	å 134	û 150	ª 166	Â 182	ã 198	Í 214	µ 230	÷ 246
7	0111	ç 135	ù 151	º 167	À 183	Ã 199	Î 215	þ 231	¸ 247
8	1000	ê 136	ÿ 152	¿ 168	© 184	╚ 200	Ï 216	Þ 232	° 248
9	1001	ë 137	Ö 153	® 169	╣ 185	╔ 201	┘ 217	Ú 233	¨ 249
A	1010	è 138	Ü 154	¬ 170	║ 186	╩ 202	┌ 218	Û 234	· 250
B	1011	ï 139	ø 155	½ 171	╗ 187	╦ 203	█ 219	Ù 235	¹ 251
C	1100	î 140	£ 156	¼ 172	╝ 188	╠ 204	▄ 220	ý 236	³ 252
D	1101	ì 141	Ø 157	¡ 173	¢ 189	═ 205	¦ 221	Ý 237	² 253
E	1110	Ä 142	× 158	« 174	¥ 190	╬ 206	Ì 222	¯ 238	■ 254
F	1111	Å 143	ƒ 159	» 175	┐ 191	¤ 207	▀ 223	´ 239	SP 255

4.3.11 Page254 (Space)

Table 4.3.12 Page254 Indicated Characters (80H–FFH)

	HEX	8	9	A	B	C	D	E	F
HEX	BIN	1000	1001	1010	1011	1100	1101	1110	1111
0	0000	UD 128	UD 144	UD 160	UD 176	UD 192	UD 208	UD 224	UD 240
1	0001	UD 129	UD 145	UD 161	UD 177	UD 193	UD 209	UD 225	UD 241
2	0010	UD 130	UD 146	UD 162	UD 178	UD 194	UD 210	UD 226	UD 242
3	0011	UD 131	UD 147	UD 163	UD 179	UD 195	UD 211	UD 227	UD 243
4	0100	UD 132	UD 148	UD 164	UD 180	UD 196	UD 212	UD 228	UD 244
5	0101	UD 133	UD 149	UD 165	UD 181	UD 197	UD 213	UD 229	UD 245
6	0110	UD 134	UD 150	UD 166	UD 182	UD 198	UD 214	UD 230	UD 246
7	0111	UD 135	UD 151	UD 167	UD 183	UD 199	UD 215	UD 231	UD 247
8	1000	UD 136	UD 152	UD 168	UD 184	UD 200	UD 216	UD 232	UD 248
9	1001	UD 137	UD 153	UD 169	UD 185	UD 201	UD 217	UD 233	UD 249
A	1010	UD 138	UD 154	UD 170	UD 186	UD 202	UD 218	UD 234	UD 250
B	1011	UD 139	UD 155	UD 171	UD 187	UD 203	UD 219	UD 235	UD 251
C	1100	UD 140	UD 156	UD 172	UD 188	UD 204	UD 220	UD 236	UD 252
D	1101	UD 141	UD 157	UD 173	UD 189	UD 205	UD 221	UD 237	UD 253
E	1110	UD 142	UD 158	UD 174	UD 190	UD 206	UD 222	UD 238	UD 254
F	1111	UD 143	UD 159	UD 175	UD 191	UD 207	UD 223	UD 239	UD 255

UD: undefined

4.3.12 Page255 (Space)

Table 4.3.13 Page255 Indicated Characters (80H–FFH)

	HEX	8	9	A	B	C	D	E	F
HEX	BIN	1000	1001	1010	1011	1100	1101	1110	1111
0	0000	UD 128	UD 144	UD 160	UD 176	UD 192	UD 208	UD 224	UD 240
1	0001	UD 129	UD 145	UD 161	UD 177	UD 193	UD 209	UD 225	UD 241
2	0010	UD 130	UD 146	UD 162	UD 178	UD 194	UD 210	UD 226	UD 242
3	0011	UD 131	UD 147	UD 163	UD 179	UD 195	UD 211	UD 227	UD 243
4	0100	UD 132	UD 148	UD 164	UD 180	UD 196	UD 212	UD 228	UD 244
5	0101	UD 133	UD 149	UD 165	UD 181	UD 197	UD 213	UD 229	UD 245
6	0110	UD 134	UD 150	UD 166	UD 182	UD 198	UD 214	UD 230	UD 246
7	0111	UD 135	UD 151	UD 167	UD 183	UD 199	UD 215	UD 231	UD 247
8	1000	UD 136	UD 152	UD 168	UD 184	UD 200	UD 216	UD 232	UD 248
9	1001	UD 137	UD 153	UD 169	UD 185	UD 201	UD 217	UD 233	UD 249
A	1010	UD 138	UD 154	UD 170	UD 186	UD 202	UD 218	UD 234	UD 250
B	1011	UD 139	UD 155	UD 171	UD 187	UD 203	UD 219	UD 235	UD 251
C	1100	UD 140	UD 156	UD 172	UD 188	UD 204	UD 220	UD 236	UD 252
D	1101	UD 141	UD 157	UD 173	UD 189	UD 205	UD 221	UD 237	UD 253
E	1110	UD 142	UD 158	UD 174	UD 190	UD 206	UD 222	UD 238	UD 254
F	1111	UD 143	UD 159	UD 175	UD 191	UD 207	UD 223	UD 239	UD 255

UD: undefined

4.3.13 International character set

International characters listed in Table 4.3.14 can be changed by using the **ESC R** command. Refer to the description of the **ESC R** command in Section 5.3, Command Details.

Table 4.3.14 International Character Set (Indicated Character Selection by Command)

Country	ASCII code (Hex)											
	23	24	40	5B	5C	5D	5E	60	7B	7C	7D	7E
U.S.A	#	$	@	[	\	]	^	`	{	|	}	~
France	#	$	à	°	ç	§	^	`	é	ù	è	¨
Germany	#	$	§	Ä	Ö	Ü	^	`	ä	ö	ü	ß
U.K.	£	$	@	[	\	]	^	`	{	|	}	~
Denmark I	#	$	@	Æ	Ø	Å	^	`	æ	ø	å	~
Sweden	#	¤	É	Ä	Ö	Å	Ü	é	ä	ö	å	ü
Italy	#	$	@	°	\	é	^	ù	à	ò	è	ì
Spain I	Pt	$	@	¡	Ñ	¿	^	`	¨	ñ	}	~
Japan	#	$	@	[	¥	]	^	`	{	|	}	~
Norway	#	¤	É	Æ	Ø	Å	Ü	é	æ	ø	å	ü
Denmark II	#	$	É	Æ	Ø	Å	Ü	é	æ	ø	å	ü
Spain II	#	$	á	¡	Ñ	¿	é	`	í	ñ	ó	ú
Latin America	#	$	á	¡	Ñ	¿	é	ü	í	ñ	ó	ú
Korea	#	$	@	[	₩	]	^	`	{	|	}	~

4.4 Self-test

4.4.1 Starting the self-test

There are two ways to start the self-test, as follows:

- Use **US** @ commands.
- Set the display to “Execute self-test” using DIP switch 1-8, and then turn on the power.

4.4.2 Ending the self-test

- After a series of self-tests is executed, the screen is cleared, the cursor is moved to the home position, and the display goes into the standby state.

4.4.3 Contents of the self-test

The self-test shows the following:

- Control ROM version.
- DIP switch states.
- Memory switch settings
- Display characters.
- Functions.

4.4.4 Notes

1) During the self-test, only the self-test is processed; data is not processed.
   ① During the self-test, DTR (DM-D210 → host interface) goes to the MARK state.
   ② The DM-D210 does not receive data during the self-test.
   ③ The DM-D210 does not transmit data to the printer.
2) Upon the completion of the self test by the **US** @ command, the following information and settings are held:
   ① Contents of the receive buffer when receiving the self-test command and starting the self-test.
   ② Defined contents of user-defined characters.
   ③ Defined contents of the macro processing program.
   ④ Counter (time) settings.

4.5 RAM Check

When the power is turned on, the built-in RAM is checked. If an error is detected, the following occurs:

1) The error message is displayed.
2) The display does not operate (idle state) until the power is turned off.

5. COMMAND DESCRIPTIONS

5.1 Command Notation

xxxx command	**Describes the command headings.**
[Name]	The name of the command.
[Format]	The code sequence. ASCII indicates the ASCII equivalents. Hex indicates the hexadecimal equivalents. Decimal indicates the decimal equivalents. [x]k indicates the contents of the [ ] should be repeated k times. In this case, x changes in some commands.
[Range]	Gives the allowable ranges for the arguments.
[Description]	Describes the function of command.
[Notes]	Provides important information on setting and using the display command, if necessary.
[Default]	Gives the default values (if any) for the command arguments.
[Reference]	Lists related commands.
[Example]	Indicates the use of commands when opening a device file by assigning "#1" to the RS-232 port when using Microsoft® Basic.

5.2 Common Terms Used in the Command Descriptions

1) Cursor:

The cursor is located at the position on the screen where the next character will be written. The position is indicated by the cursor.

2) Window:

The window is a general concept that specifies an area on the screen. Since the screen can be divided into a maximum of four areas (windows) using a command, and since different modes can be applied to each of them, each window behaves like a separate screen.

3) Current window:

The current window is the window that contains the cursor.

5.3 Defaults (Initial State at Power-On)

The contents of the initial state are shown in Table 5.3.1 below.

Table 5.3.1 Initial State Setting Contents

Setting Items	Setting Contents
Display mode	Overwrite mode
Position	Home position (the upper left corner of the window)
Screen	Clear
Window	Not defined
Character code table	Page 0 (*1)
International character set	U.S.A. (*1)
User-defined characters	Not defined
Macro definition	Not defined
Reverse characters	Canceled
Display blinking	Canceled
Brightness adjustment	100% (*1)
Peripheral device selection	Display (*1)
Set-up time	00:00

(*1): Set by the memory switch.

5.4 Command Details

BS

[Name] Move cursor left

[Format]

ASCII	BS
Hex	08
Decimal	8

[Description] Moves the cursor one character position to the left.

[Notes]

- When the cursor is at the left end of a line, the operation of this command depends on the display mode, as follows:
  - ① Overwrite mode:
    When the cursor is at the left end of the lower line, it is moved to the right end of the upper line. When it is at the left end of the upper line, it is moved to the right end of the lower line.
  - ② Vertical scroll mode:
    When the cursor is at the left end of the lower line, it is moved to the right end of the upper line. When it is at the left end of the upper line, the display on the upper line is scrolled to the lower line and the upper line is cleared. At this time, the is cursor moved to the right end of the upper line.
  - ③ Horizontal scroll mode:
    All characters on the current line are scrolled one character to the right. The cursor is not moved, but the character area at the left end is cleared.
- When a window is defined, the cursor is moved only within the current window.

[Reference] **US MD1, US MD2, US MD3, ESC W**

HT

[Name] Move cursor right

[Format]

ASCII	HT
Hex	09
Decimal	9

[Description] Moves the cursor one character position to the right.

[Notes]

- When the cursor is at the right end of a line, the operation of this command depends on the display mode, as follows:
  - ① Overwrite mode:
    When the cursor is at the right end of the upper line, it is moved to the left end of the lower line. When it is at the right end of the lower line, it is moved to the left end of the upper line.
  - ② Vertical scroll mode:
    When the cursor is at the right end of the upper line, it is moved to the left end of the lower line. When it is at the right end of the lower line, the display on the lower line is scrolled to the upper line and the lower line is cleared. At this time, the cursor is moved to the left end of the lower line.
  - ③ Horizontal scroll mode:
    All characters on the current line are scrolled one character to the left. The cursor is not moved, but the character area at the left end is cleared.
- When a window is defined, the cursor is moved only within the current window.

[Reference] **US MD1, US MD2, US MD3, ESC W**

LF

[Name] Move cursor down

[Format]

ASCII	LF	
Hex	0A	
Decimal	10	

[Description] Moves the cursor down one line.

[Notes]
- When the cursor is on the lower line, the operation of this command depends on the display mode, as follows:
  - ① Overwrite mode:
    The cursor is moved to the same column on the upper line.
  - ② Vertical scroll mode:
    The characters displayed on the lower line are scrolled to the upper line, and the lower line is cleared. he cursor remains at the same position.
  - ③ Horizontal scroll mode:
    The cursor is not moved.
- When a window is defined, the cursor is moved only within the current window.

[Reference] **US MD1, US MD2, US MD3, ESC W**

US LF

[Name] Move cursor up

[Format]

ASCII	US	LF
Hex	1F	0A
Decimal	31	10

[Description] Moves the cursor up one line.

[Notes]
- When the cursor is on the upper line, the operation of this command depends on the display mode, as follows:
  - ① Overwrite mode:
    The cursor is moved to the same column on the lower line.
  - ② Vertical scroll mode:
    The characters displayed on the upper line are scrolled to the lower line, and the upper line is cleared. The cursor remains at the same position.
  - ③ Horizontal scroll mode:
    The cursor is not moved.
- When a window is defined, the cursor is moved only within the current window.

[Reference] **US MD1, US MD2, US MD3, ESC W**

HOM

[Name]	Move cursor to home position		
[Format]	ASCII	HOM	
	Hex	0B	
	Decimal	11	
[Description]	Moves the cursor to the left-most position on the upper line (home position).		
[Note]	Home position indicates the first column of the upper line. When a window is defined, the home position is the upper left corner of the window.		
[Reference]	**ESC W**		

CR

[Name]	Move cursor to left-most position		
[Format]	ASCII	CR	
	Hex	0D	
	Decimal	13	
[Description]	Moves the cursor to the left-most position on the current line.		
[Note]	The cursor is moved only within the current window.		
[Reference]	**ESC W**		

US CR

[Name]	Move cursor to right-most position		
[Format]	ASCII	US	CR
	Hex	1F	0D
	Decimal	31	13
[Description]	Moves the cursor to the right-most position on the current line.		
[Note]	The cursor is moved only within the current window.		
[Reference]	**ESC W**		

US B

[Name]	Move cursor to bottom position		
[Format]	ASCII	US	B
	Hex	1F	42
	Decimal	31	66
[Description]	Moves the cursor to the bottom position.		
[Note]	The bottom position indicates the 20th column of the lower line. When a window is defined, the bottom position is the lower right corner of the window.		
[Reference]	**ESC W**		

US $ *n m*

[Name]	Move cursor to specified position				
[Format]	ASCII	US	$	*n*	*m*
	Hex	1F	24	*n*	*m*
	Decimal	31	36	*n*	*m*
[Range]	$1 \le n \le 20$ $m = 1$ or 2				
[Description]	Moves the cursor to the nth column on the mth line.				
[Note]	If a value exceeding the range is specified for n (column) and/or m (line), this command is ignored and the cursor does not move.				

CLR

[Name]	Clear display screen	
[Format]	ASCII	CLR
	Hex	0C
	Decimal	12
[Description]	Clears all the displayed characters.	
[Notes]	• After the command is executed, the cursor moves to the home position. • When a window is defined, the cursor is moved only within the current window.	
[Reference]	**ESC W**	

CAN

[Name]	Clear cursor line	
[Format]	ASCII	CAN
	Hex	18
	Decimal	24
[Description]	Clears the line containing the cursor.	
[Notes]	• After this command is executed, the cursor moves to the left-most position on the current line. • When a window is defined, the cursor is moved only within the current window.	
[Reference]	**ESC W**	

ESC = *n*

[Name] Select peripheral device

[Format]

ASCII	ESC	=	*n*
Hex	1B	3D	*n*
Decimal	27	61	*n*

[Range] $1 \le n \le 3$

[Description] Selects the device(s) to which the host computer sends data, using the value(s) of *n* from the following table:

Table 4.4.1 Bit table for select peripheral device

Bit	Off/On	Hex	Decimal	Function
0	Off(*)	00	0	Printer canceled.
	On	01	1	Printer selected.
1	Off	00	0	Display canceled.
	On(*)	02	2	Display selected.
2 to 7	--	--	--	Undefined.

(*):Default setting

[Notes]

- When the printer is selected by *n* = 1, all the data from the host computer is transmitted to the printer via the display.
- When the customer display is selected by *n* = 2, all the data from the host computer is processed internally in the display, and no data is transmitted to the printer.
- When both the printer and customer display are selected by *n* = 3, all the data from the host computer is processed internally in the display and is simultaneously transmitted to the printer.
- If **ESC = 2** is received when the printer is selected by *n* = 1 or *n* = 3, this command sends 1BH (27) 3DH (61) 02H (2) to the printer and stops transmitting data to the printer.
- If **ESC = 1** is received when the customer display is selected by *n* = 2, this command sends 1BH (27) 3DH (61) 01H (1) to the printer and starts transmitting data to the printer.
- If **ESC = 3** is received when the customer display is selected by *n* = 2, this command sends 1BH (27) 3DH (61) 03H (3) to the printer and starts transmitting data to the printer.
- If **ESC = 2** is received again after selecting the display by *n* = 2, the three-byte data is executed only inside the display, and nothing is sent to the printer.
- With the pass through connection, when the **ESC =** command is received while the printer is selected with *n* = 1 or *n* = 3, if *n* following **ESC =** is not 1, 2, or 3, the display unit sends the whole of the **ESC = *n*** to the printer directly.

[Default] *n* = 2 or the setting value by the memory switch 13

[Example]

```
PRINT #1;CHR$(&H1B);CHR$(&H3D);CHR$(&H1);  ①
PRINT #1,"SELECT PRINTER";                 ②
PRINT #1,CHR&(&H1B);CHR$(&H3D);CHR$(&H2);  ③
PRINT #1,"SELECT DISPLAY";                 ④
```

Figure 5.4.1 Example Peripheral Device Selection Program

- Data in lines ① and ③ is processed internally in the display and sent to the printer simultaneously.
- Data in line ② is sent to the printer regardless of display execution.
- Data in line ④ only appears on the display screen, and nothing is sent to the printer.

ESC @

[Name] Initialize display

[Format]

ASCII	ESC	@
Hex	1B	40
Decimal	27	64

[Description] Resets the various display settings to their initial values.

[Notes]
- The software settings are reset to their power-on values.
- The DIP switches are not checked again.
- The data in the receive buffer is not cleared
- After initializing the display, the display screen is cleared and the cursor moves to the home position.

[Reference] Section 5.3, Defaults

ESC % *n*

[Name] Select/cancel user-defined character set

[Format]

ASCII	ESC	%	*n*
Hex	1B	25	*n*
Decimal	27	37	*n*

[Range] $0 \le n \le 255$

[Description] Selects or cancels the user-defined character set.

[Notes]
- When *n* is 1, the user-defined character set is selected. When the user-defined character set is not defined using the **ESC &** command, the internal character set is displayed.
- When *n* is 0, the user-defined character set is canceled. (The internal character set is selected.) In this case, this command has no effect on the user-defined characters that have already been defined using the **ESC &** command.
- This command has no effect on the characters already displayed.

[Default] $n = 0$

[Reference] **ESC &**

ESC & *s n m [a [p]s x a] (m - n +1)*

[Name] Define user-defined characters

[Format]

ASCII	ESC	&	*s*	*n*	*m*	*[a [p] s x a] m - n + 1*
Hex	1B	26	*s*	*n*	*m*	*[a [p1 p2 ...ps] x a] m - n + 1*
Decimal	27	38	*s*	*n*	*m*	*[a [p] s x a] m - n + 1*

[Description] Defines user-defined characters.

[Range]
$s = 1$
$32 \le n \le m \le 126$
$0 \le a \le 5$
$0 \le p1 \ldots ps \times a \le 255$

[Notes] Defines user-defined characters.

- *s* denotes the number of bytes in the vertical direction.
- *n* specifies the beginning character code for the definition, and m specifies the final character code. When only one character is defined, use *n* = *m*.
- 95 characters can be defined between character codes 20H (32) and 7EH (126) in the character code table.
- *a* denotes the number of dots in the horizontal direction. When *a* < 5, the remaining dots on the right side of the user-defined characters are padded with spaces.
- *p1 ... pk* is the dot data to be defined for the characters. This indicates the dot pattern for a dots in the horizontal direction from the left side.
- The number of data items to be defined is $s \times a$. When 8 bits are specified for the communication word length, the most significant bit is ignored.
- Once the user-defined characters are defined, they remain effective until they are redefined, **ESC @** is executed, or the power is turned off.
- When only the user-defined characters are defined and the user-defined character set is not selected using the **ESC %** command, the user-defined characters are not displayed.

[Default] Not defined.

[Reference] **ESC %, ESC ?**, Section 1.2, Character Specifications

[Example] To define the character "" at character code 20H (32):

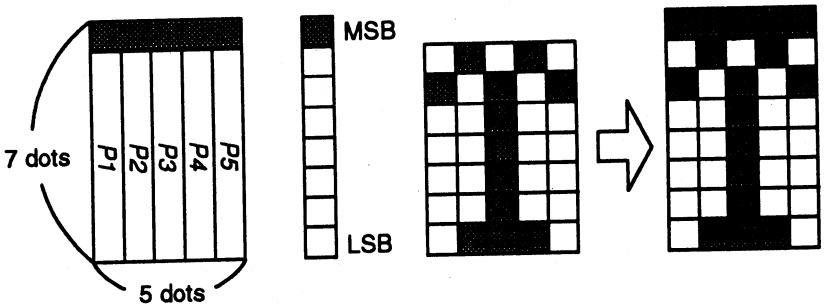

Figure 5.4.2 Example Bit image Specification

- When the communication word length is specified as seven bits, or when the word length is specified as eight bits and the most significant bit is processed as “0,” the user- defined character definition is executed as shown below:

```
PRINT #1 CHR$(&H1B);CHR$(&H26);CHR$(&H1);
PRINT #1 CHR$(&H20);CHR$(&H20);CHR$(&H5);
PRINT #1 CHR$(&H20);CHR$(&H41);CHR$(&H3F);CHR$(&H41);CHR$(&H20);
```

Figure 5.4.3 Example Bit image Specification

- When the communication word length is specified as eight bits and the most significant bit is processed as “1,” the user-defined character definition is executed as shown below:

```
PRINT #1 CHR$(&H1B);CHR$(&H26);CHR$(&H1);
PRINT #1 CHR$(&H20);CHR$(&H20);CHR$(&H5);
PRINT #1 CHR$(&HA0);CHR$(&HC1);CHR$(&HBF);CHR$(&HC1);CHR$(&HA0);
```

Figure 5.4.4 Example Bit image Specification

ESC ? *n*

[Name] Cancel user-defined characters

[Format]

ASCII	ESC	?	*n*
Hex	1B	3F	*n*
Decimal	27	63	*n*

[Range] $32 \le n \le 126$

[Description] Cancels user-defined characters.

[Notes]
- This command cancels the pattern defined for the character code specified by *n*.
- If specified code is transmitted after the pattern is canceled by this command, the internal character is displayed.
- If the specified character code is not defined, this command is ignored.
- This command has no effect on characters already displayed.

[Reference] **ESC &**

ESC R *n*

[Name] Select an international character set

[Format]

ASCII	ESC	R	*n*
Hex	1B	52	*n*
Decimal	27	82	*n*

[Range] $0 \le n \le 13$

[Description] Selects an international character set n from the following table:

Table 5.4.2 Parameters for international Character Set

n	Character Set
0	U.S.A.
1	France
2	Germany
3	U.K.
4	Denmark I
5	Sweden
6	Italy
7	Spain I
8	Japan
9	Norway
10	Denmark II
11	Spain II
12	Latin America
13	Korea

[Default] *n* = 0 or the setting value by the memory switch 11.

[Reference] Section 4.3.13, International Character Set

ESC t *n*

[Name] Select character code table

[Format]

ASCII	ESC	t	*n*
Hex	1B	74	*n*
Decimal	27	116	*n*

[Range] $0 \le n \le 5$, 16, 17, 18, 19, 254, 255

[Description] Selects a page n from the character code table.

[Notes]
- This command has no effect on data displayed before this command is received.
- This command has no effect on the selected international character set.

[Default] *n* = 0 (Page 0 is selected.) or the setting value by the memory switch 10.

[Reference] Section 4.3, Character Code Tables

ESC W *n m (x1 y1 x2 y2)*

[Name] Select/cancel window range

[Format]

ASCII	ESC	W	*n*	*m*	*(x1 y1 x2 y2)*
Hex	1B	57	*n*	*m*	*(x1 y1 x2 y2)*
Decimal	27	87	*n*	*m*	*(x1 y1 x2 y2)*

[Range]
$1 \le n \le 4$
m = 0, 1, 48, 49
$1 \le x1 \le x2 \le 20$
$1 \le y1 \le y2 \le 2$

[Description] Selects or cancels a single window on the display screen.

[Notes]
- *n* specifies the window number to be selected or canceled.
- *m* specifies selection or cancellation.
  When *m* = 1 or 49, a window is selected. (Values *x1*, *y1*, *x2*, and *y2* are required.)
  When *m* = 0 or 48, a window is canceled.(Values *x1*, *y1*, *x2*, and *y2* are not required.)
- *x1* and *y1* set the positions of the upper left column and line of the window, respectively.
- *x2* and *y2* set the positions of the lower right column and line of the window, respectively.
- Up to four windows can be selected simultaneously on the display screen. However, the window ranges cannot overlap.
- If a value outside the display screen or overlapping another window is set, this command is ignored.
- To cancel a window, arguments for the window range (*x1*, *y1*, *x2*, and *y2*) must not be transmitted.

[Default] Not defined.

[Example]

```
PRINT #1 CHR$(&H1B);CHR$(&H57);CHR$(&H1);CHR$(&H1);_____①
PRINT #1 CHR$(1);CHR$(1);CHR$(10);CHR$(2);_____②
PRINT #1 CHR$(&H1B);CHR$(&H24);CHR$(1);CHR$(1);_____③
PRINT #1 "ABCDEFGHIJKLMNOP";_____④
```

Figure 5.4.5 Example Windows Specification Program

- The left half of the range shown in the figure below is specified as Window **1** by executing ① and ②.

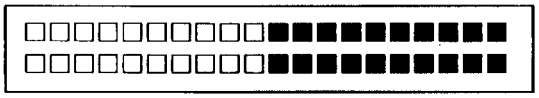

Figure 5.4.6 Windows Specification

- Only the inside of the window is displayed by executing ③, and executing ④ results in the display shown in the figure below. (Refer to **US $** for details about ③.)

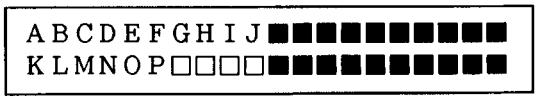

Figure 5.4.7 Example Windows Internal Data Processing

US MD1

[Name] Select overwrite mode

[Format]

ASCII	US	MD1
Hex	1F	01
Decimal	31	1

[Description] Selects overwrite mode as the screen display mode.

[Notes]
- In overwrite mode, entering a character code moves the cursor to the left end of the lower line when the cursor is at the right end of the upper line, and to the left end of the upper line when the cursor is at the right end of the lower line.
- This mode is selected when the power is turned on.
- Selecting overwrite mode cancels horizontal or vertical scroll mode.
- Except when the cursor is at the right end, entering a character code moves the cursor one character to the right after displaying the character.

[Reference] **US MD2, US MD3**

US MD2

[Name] Select vertical scroll mode

[Format]

ASCII	US	MD2
Hex	1F	02
Decimal	31	2

[Description] Selects vertical scroll mode as the screen display mode.

[Notes]
- In vertical scroll mode, entering a character code moves the cursor to the left end of the lower line when the cursor is at the right end of the upper line, scrolls the characters displayed on the lower line to the upper line, and clears the lower line when the cursor is at the right end of the lower line.
  At this time, the cursor is moved to the left end of the lower line.
- Selecting vertical scroll mode cancels overwrite or horizontal scroll mode.
- Except when the cursor is at the right end, entering a character code moves the cursor one character to the right after displaying the character.

[Reference] **US MD1, US MD3**

US MD3

[Name] Select horizontal scroll mode

[Format]

ASCII	US	MD3
Hex	1F	03
Decimal	31	3

[Description] Selects horizontal scroll mode as the screen display mode.

[Notes]
- In horizontal scroll mode, entering a character code scrolls all displayed characters (including commas and periods) one character to the left, then displays the new character at the right end (when the cursor is at the right end of either line.)
- Selecting horizontal scroll mode cancels overwrite or vertical scroll mode.
- Except when the cursor is at the right end, entering a character code moves the cursor one character to the right after displaying the character.

[Reference] **US MD1, US MD2**

US E *n*

[Name] Set display screen blink interval

[Format]

ASCII	US	E	*n*
Hex	1F	45	*n*
Decimal	31	69	*n*

[Range] $0 \leq n \leq 255$

[Description] Sets or cancels the blink interval of the display screen.
- *n* specifies the blink interval. [($n \times 50$ ms.) ON / ($n \times 50$ ms.) OFF] is repeated.
- When $n = 0$, the display is kept on (cancels blinking).
- When $n = 255$, the display is turned off but the contents of the display are maintained.

[Note] This command does not affect the brightness of the vacuum fluorescent display.

[Default] $n = 0$

US T *h m*

[Name] Set and display time counter

[Format]

ASCII	US	T	*h*	*m*
Hex	1F	54	*h*	*m*
Decimal	31	84	*h*	*m*

[Range] $0 \le h \le 23$
$0 \le m \le 59$

[Description] The counter time is set and displayed at the right side of the bottom line.

- *h* is hours, and *m* is minutes.

[Notes]

- When this command is entered, the screen is cleared and the time is displayed in 24-mode at the right side of the bottom line.
- The time counter starts from the transmitted code h:m:00.
- After the time is displayed, the cursor moves to the home position.
- The counter display disappears when any of the following occurs:
  1) The cursor moves to the bottom line.
  2) Display characters move to the bottom line.
  3) The **CLR** command is received.
- Even if the time counter is cleared, it continues to be updated in the display.

[Default] *h* = 0, *m* = 0

[Reference] **US U**

US U

[Name] Display time counter

[Format]

ASCII	US	U
Hex	1F	55
Decimal	31	85

[Description] Displays the time counter at the right side of the bottom line.

[Notes]

- If the time has already been set using the **US T *h m*** command, the elapsed time is displayed in real time in the format “hours : minutes : seconds”.
- If the time has not yet been set, the elapsed time (from when the counter was initialized by turning on the power or from the **ESC** @ command) is displayed in real time in the format “ hours : minutes :seconds ".
- After the counter is displayed, the cursor moves to the home position.
- The counter display is cleared when any of the following occurs:
  1) The cursor moves to the bottom line.
  2) Display characters move to the bottom line.
  3) The **CLR** command is received.
- Even if the time counter is cleared, it continues to be updated in the display.

[Reference] **US T**

[Example]

1) Counter display just before receiving **UST *h m***:

```
ABC:$259.35□□□□□□□□□□
□□(DEF··%23)□□□□□□□□
```

[□:OFF]

Figure 5.4.8 Example Display Before Setting the Counter

2) **US T *h m***(1FH(31)54H(84)14 15)is received:

```
□□□□□□□□□□□□□□□□□□□□
□□□□□□□□□□□□14:15:00
```

[□:OFF]

Figure 5.4.9 Example Counter Setting Indication

screen (Figure 5.4.8) is cleared, and the input time is displayed at the right side of the lower line; counting begins from 14:15:00 seconds. At this time, the cursor moves to the home position indicated by . □

3) Display data (“ABC”) is received:

```
ABC□□□□□□□□□□□□□□□□□□□
□□□□□□□□□□□□14:15:00
```

[□:OFF]

Figure 5.4.10 Example Indication When the Cursor Does Not Move

counter display in the bottom line has no effect on data displayed in the top line.

4) LF(10H(16)) is received:

```
ABC□□□□□□□□□□□□□□□□□□□
□□□□□□□□□□□□□□□□□□□□
```

[□:OFF]

Figure 5.4.11 Example Indication When the Cursor Moves

Moving the cursor to the bottom line clears the time display, but counting continues internally. (Figure 4.4.11 shows assumed overwrite mode.)

US X *n*

[Name] Brightness adjustment

[Format]

ASCII	US	X	*n*
Hex	1F	58	*n*
Decimal	31	88	*n*

[Range] $1 \leq n \leq 4$

[Description] Sets the brightness of the fluorescent character display tube. *n* selects the percentage of brightness as follows:

Table 5.4.3 Parameters for Brightness Adjustment

n	Brightness
1	20%
2	40%
3	60%
4	100%

[Default] *n* = 4 or the setting value by the memory switch 12

US r *n*

[Name] Select/cancel reverse characters

[Format]

ASCII	US	r	*n*
Hex	1F	72	*n*
Decimal	31	114	*n*

[Range] *n* = 0, 1, 48, 49

[Description] Selects or cancels reverse display of the characters received after this command.

- When *n* = 1 or 49, reverse characters are selected.
- When *n* = 0 or 48, reverse characters are canceled.

[Default] *n* = 0

US v *n*

[Name] Status confirmation by DTR signal

[Format]

ASCII	US	v	*n*
Hex	1F	76	*n*
Decimal	31	118	*n*

[Range] *n* = 0, 1, 48, 49

[Description] Sets the DTR signal in the host interface to the MARK or SPACE state.

[Notes]

- When *n* = 1, the DTR signal goes to the MARK state.
  If it is already in the MARK state, the DTR signal does not change.
- When *n* =0, the DTR signal goes to the SPACE state if the following conditions are satisfied:
  ① The receive buffer is not in the buffer-full state.
  ② The self-test is not being executed.
  If it is already SPACE when *n* = 0 is received, the DTR signal does not change.
- This command is effective only when the display alone is selected by **ESC = 2**.
  Therefore, if the printer is already selected, this command (three bytes) is ignored and is processed as normal data. (The data is transmitted to the printer.)
- If any data is received during status confirmation using the DTR signal, normal interface timing control is executed immediately.

US @

[Name] Execute self-test

[Format]

ASCII	US	@
Hex	1F	40
Decimal	31	64

[Description] Executes the self-test.

[Notes]

- A series of self-tests is displayed. All set values except those listed below are initialized:
  1) User-defined character definitions
  2) Macro definitions
  3) Time counter value
- After completion of the self-tests, the screen is cleared and the display position is moved to the home position.

[Reference] Section 4.4, Self-test

US :

[Name] Start/end macro definition

[Format]

ASCII	US	:
Hex	1F	3A
Decimal	31	58

[Description] Starts or ends a macro definition.

[Notes]
- Up to 80 bytes can be defined for macro processing (one byte per character).
- Macro definition processing starts with the first **US :** command and ends with the second **US :** command.
- Receipt of either of the two types of data shown below is regarded as a macro definition error. Macro definition processing is stopped, and any following data is processed as normal data. At this time, the macro remains undefined.
  1) The **US ^** command is received during a macro processing definition.
  2) A macro processing definition exceeds 80 bytes (except for the **US :** command).
- To delete a macro definition, send a **US :** command just after **US :**.

[Reference] **US ^**

[Example]

```
PRINT#1,CHR$(&H1F);CHR$(&H3A);———————————————— ①
PRINT#1,CHR$(&HC);———————————————————————— ②
PRINT#1,CHR$(&H1F);CHR$(&H45);CHR$(0);————————— ③
PRINT#1,” Execution MACRO !!”;————————————————— ④
PRINT#1,CHR$(&H1F);CHR$(&H45);CHR$(10);————————— ⑤
PRINT#1,CHR$(&H1F);CHR$(&H3A); ———————————————— ⑥
```

Figure 5.4.12 Example Macro Definition Processing Program

- ① is the starting command and ⑥ is the ending command of a macro definition.
- The 26-byte data from ② to ⑤ is stored in the macro definition range. When the display receives the macro execution command, the defined data is in processed order. (Refer to **US ^**.)
- ② is a screen clear command. (Refer to **CLR**.)
- ③ and ⑤ are blinking commands. (Refer to **US E**.)

US ^ *n m*

[Name] Execute and quit macro

[Format]

ASCII	US	^	*n*	*m*
Hex	1F	5E	*n*	*m*
Decimal	31	94	*n*	*m*

[Range] $0 \le n \le 255$
$0 \le m \le 255$

[Description] Executes the process defined as a macro.

- *n* specifies the time interval for displaying characters in units of [$n \times 20$ msec] when a macro is executed. This specifies the time interval before displaying each successive character but does not affect the processing speed of command codes.
- *m* specifies the interval of execution. Where macro processing is repeated, it starts over from the beginning after the completion state of the previous macro processing is held for [$m \times 50$ msec].

[Notes]

- If data is received from the host during macro processing, the macro processing is terminated.
- After macro processing is finished, the current window is cleared and the cursor is moved to the home position in the current window.
- Display settings at the completion of macro processing remain valid.
- After macro processing is finished, the screen is cleared and the cursor is moved to the home position. Display settings in place at the completion of macro processing remain valid.
- If a macro is undefined, this command is invalid and the display content is not affected.
- If **ESC= n** , **ESC** @, and **US** @ are defined in the macro, these commands are ignored when executing the macro commands.
- Even if the printer is selected (by a peripheral device selection command) when macro processing is started, data is not transmitted to the printer during macro processing.

[Reference] **US :**

US ^ *n m*

[Example]

```
PRINT #1,CHR$(&H1F);CHR$(&H3A);
PRINT #1,CHR$(&HC);
PRINT #1,CHR$(&H1F);CHR$(&H45);CHR$(0);                    ①
PRINT #1," Execution MACRO !!";
PRINT #1,CHR$(&H1F);CHR$(&H45);CHR$(10);
PRINT #1,CHR$(&H1F);CHR$(&H3A);
PRINT #1,CHR$(&H1F);CHR$(&H5E);CHR$(5);CHR$(100);          ②
```

Figure 5.4.13 Example Macro Definition Processing and Macro Execution Program

- Macro definition is executed by ①.
- Macro execution is started by ②. In this case, the time interval for displaying the characters is (5 × 20 ms). When 100 ms has passed after the character “E” has been displayed, the next character, “x”, is displayed.

```
□E□□□□□□□□□□□□□□□□□□□□
□□□□□□□□□□□□□□□□□□□□□□
```

[□OFF]

↓ (After a 100 ms interval)

```
□Ex□□□□□□□□□□□□□□□□□□□□
□□□□□□□□□□□□□□□□□□□□□□
```

[□OFF]

The macro execution interval is (100 × 50 ms). After the blinking display shown in the figure below is held for 5 s, macro processing is repeated from a clear screen.

```
□Execution□MACRO□!!□
□□□□□□□□□□□□□□□□□□□□□□
```

[□OFF]

Figure 5.4.14 Macro Processing Explanation

US . *n*

[Name] Display period

[Format]

ASCII	US	.	*n*
Hex	1F	2E	*n*
Decimal	31	46	*n*

[Range] $32 \le n \le 126$ and $128 \le n \le 255$

[Description] Displays the specified character n and a period to the right of the character.

[Notes]
- *n* indicates a displayable character code
- The period is displayed once only for the specified character n and is not displayed for subsequent characters.
- In overwrite mode, if any other character is written in the character position for which the period was displayed, the period is cleared.
- In vertical scroll mode, if the display position of the character for which the period was displayed is moved, the period moves with the character.
- In horizontal scroll mode, if the display position of the character for which the period was displayed is moved, the period moves with the character.
- The cursor moves one character to the right after displaying the period.

[Reference] **US ,** , **US ;**

US , *n*

[Name] Display comma

[Format]

ASCII	US	,	*n*
Hex	1F	2C	*n*
Decimal	31	44	*n*

[Range] $32 \le n \le 126$ and $128 \le n \le 255$

[Description] Displays the specified character n and a period to the right of the character.

[Notes]
- *n* indicates a displayable character code
- The comma is displayed once only for the specified character *n* and is not displayed for subsequent characters.
- In overwrite mode, if any other character is written in the character position for which the comma was displayed is moved, the comma moves with the character.
- In horizontal scroll mode, if the display position of the character for which the comma was displayed is moved, the comma moves with the character.
- The cursor moves one character to the right after displaying the comma.
- The command is not valid for user-defined Characters.

US ; *n*

[Name] Display semicolon (period and comma)

[Format]

ASCII	US	;	*n*
Hex	1F	3B	*n*
Decimal	31	59	*n*

[Range] $32 \le n \le 126$ and $128 \le n \le 255$

[Description] Displays the specified character n and a semicolon (period and comma) to the right of the character.

[Notes]
- *n* indicates a displayable character code
- The semicolon is displayed once only for the specified character n and is not displayed for subsequent characters.
- In overwrite mode, if any other character is written in the character position for which the semicolon was displayed, the semicolon is cleared.
- In vertical scroll mode, if the display position of the character for which the semicolon was displayed is moved, the semicolon moves with the character.
- In horizontal scroll mode, if the display position of the character for which the semicolon was displayed is moved, the semicolon moves with the character.
- The cursor moves one character to the right after displaying the semicolon.
- The command is not valid for user-defined Character.

US # *n m*

[Name] Turn annunciator on/off

[Format]

ASCII	US	#	*n*	*m*
Hex	1F	23	*n*	*m*
Decimal	31	35	*n*	*m*

[Range] $n = 0, 1, 48, 49$
$0 \le m \le 20$

[Description] Turns the annunciator at column m on or off.
- When $n = 0$ or 48, the annunciator at column m is turned off.
- When $n = 1$ or 49, the annunciator at column m is turned on.

[Notes]
- *m* specifies the column number (the left-most column is column 1) where the annunciator to be turned on or off is located. However, when m equals 0, all annunciators are either turned off or on, based on the corresponding value of *n*.
- The specification to turn on the annunciator ($n = 1$) remains valid until:
  1) The annunciator is turned off using this command ($n = 0$).
  2) The **ESC** @, **US** @, or **CLR** command is executed.
  3) The power is turned off.

[Default] *n* = 0, *m* = 0

[Example]

```
PRINT #1,CHR$(&H1F);CHR$(&H23);CHR$(1);CHR$(3);_____ ①
PRINT #1,CHR$(&H1F);CHR$(&H23);CHR$(0);CHR$(0);_____ ②
```

Figure 5.4.15 Example Annunciator Control Program (1)

- The annunciator at the third column is turned on by executing ①.
- All the annunciators are turned off by executing ②.

```
PRINT #1,CHR$(&H1F);CHR$(&H23);CHR$(1);CHR$(0);_____ ③
PRINT #1,CHR$(&H1F);CHR$(&H23);CHR$(0);CHR$(3);_____ ④
```

Figure 5.4.16 Example Annunciator Control Program (2)

- All the annunciators are turned on by executing ③.
- The annunciator at the third column is turned off by executing ④.

US (A *pL pH a [n m]1...[n m]k*

[Name] Select displays(s)

[Format]

ASCII	US	(	A	*pL*	*pH*	*a*	*[n m]1...[n m]k*
Hex	1F	28	41	*pL*	*pH*	*a*	*[n m]1...[n m]k*
Decimal	31	40	65	*pL*	*pH*	*a*	*[n m]1...[n m]k*

[Range] $3 \le (pL + pH \times 256) \le 65535$ ($0 \le pL \le 255$, $0 \le pH \le 255$)
$a = 48$
$n = 48, 49$
$0 \le m \le 255$
$1 \le k \le 32767$

[Default] Display No.0 or the setting value of the memory switch 15.

[Description]
- Selects the displays to which host compute sends data.
- *n* specifies whether the display is enabled or disabled.
  When *n* = 48, the display of the device number specified with *m* is disabled to receive data from the host.
  When *n* = 49, the display of the device number specified with *m* is enabled to receive data from the host.
- *m* specifies the display device number.
  When *m* = 0, all the displays are selected regardless of the previous-set value.
  When $m \neq 0$, the display of the device number specified with *m* is selected.

US (E *pL pH n [parameter]*

[Name] User setting commands

[Description]
- Executes the process of the user setting commands.

n	Function No.	Function
1	Function 01	Changes into the user setting mode.
2	Function 02	Ends the user setting mode session. (Performs a software reset.)
3	Function 03	Sets value(s) for the memory switch.
4	Function 04	Transmits the settings of the memory switch to the host.

  - *pL*, *pH* specifies ($pL + (pH \times 256)$) as the number of bytes after *pH* (*n* and *[parameter]*).
  - *n* specifies the function code.
- The customer display must be in the user setting mode before this command can change values in the NV memory.
- In Function 02, the customer display performs software reset. Therefore, the customer display clears the receive buffer, and resets all settings (user-defined characters, macros, the setting of window, and etc.,) and the display to the mode in effect at power on.
- All customized values in the memory switch set by this command can be read by Function 04 or the command, even though the customer display does not enter the user-defined mode.

[Notes]
- Only when the customer display is connected as a stand-alone, the host PC can receive the transmit data from the display.
- Frequent write commands to NV memory may damage to the NV memory. Therefore, it is recommended to write to the NV memory 50 times or less a day.
- During processing of this command, the customer display is BUSY while writing the data to the NV user memory and stops receiving data. Therefore, it is prohibited to transmit data while the display is BUSY.

<Function 01> **US (E *pL pH n d1 d2***

[Format]

ASCII	US	(	E	*pL*	*pH*	*n*	*d1*	*d2*
Hex	1F	28	45	*03*	*00*	*01*	*49*	*4E*
Decimal	31	40	69	*3*	*0*	*1*	*73*	*78*

[Range]
($p_L + p_H \times 256$) = 3 ($p_L = 3$, $p_H = 0$)
$n = 1$
d1 = 73 (Character “I”)
d2 = 78 (Character “N”)

[Description]
- Changes into the user setting mode and transmits the following data:

Transmitted data	Hex	Decimal	Number of data
① Header	57H	87	1 byte
② Flag	23H	35	1 byte
③ Display number	30 – 39H	48 – 57	0 – 2 bytes
④ Separate code	1FH	31	1 byte
⑤ NUL	00H	0	1 byte

<Function 02> **US (E *pL pH n d1 d2 d3***

[Format]

ASCII	US	(	E	*pL*	*pH*	*n*	*d1*	*d2*	*d3*
Hex	1F	28	45	*04*	*00*	*02*	*4F*	*55*	*54*
Decimal	31	40	69	*4*	*0*	*2*	*79*	*85*	*84*

[Range]
($p_L + p_H \times 256$) = 4 ($p_L = 4$, $p_H = 0$)
$n = 2$
d1 = 79 (Character “O”)
d2 = 85 (Character "U")
d3 = 84 (Character "T")

[Description]
- Ends the user setting mode session and performs a software reset.

<Function 03> **US (E *pL pH n [a1 b18...b11]...[ak bk8...bk1]***

[Format]

ASCII	US	(	E	p_L	p_H	n	$[a1\ b1_8 \ldots b1_1] \ldots [ak\ bk_8 \ldots bk_1]$
Hex	1F	28	45	p_L	p_H	03	$[a1\ b1_8 \ldots b1_1] \ldots [ak\ bk_8 \ldots bk_1]$
Decimal	31	40	69	p_L	p_H	3	$[a1\ b1_8 \ldots b1_1] \ldots [ak\ bk_8 \ldots bk_1]$

[Range]

$10 \le (p_L + p_H \times 256) \le 65530$

(where $(p_L + p_H \times 256) = 9 \times k + 1$: $0 \le p_L \le 255$, $0 \le p_H \le 255$)

$n = 3$

a = 10 through 15

b = 48, 49, 50

$1 \le k \le 7281$

[Default at factory]

Refer to the following table for the setting of the memory switch.

[Description]

- Change the memory switch specified by *a* to the values specified with *b*.
  - When *b* = 48, the applicable bit is turned to Off.
  - When *b* = 49, the applicable bit is turned to On.
  - When *b* = 50, the applicable bit is not changed.
- The specific value corresponds some of bits in bit 8 (MSB) to bit 1 (LSB)

Function	Item to be set	Memory SW	Default	Setting range	Action when the parameter is specified out of range
Character code table	Page 0	MSW10	*n* = 0	0-5, 16-19, 254, 255	Nothing to do
International character set	U.S.A	MSW11	*n* = 0	0-13	Nothing to do
Brightness adjustment	100%	MSW12	*n* = 4	1-4	Nothing to do
Peripheral device selection	Display	MSW13	*n* = 2	1-3	Nothing to do
Cursor display	Selected	MSW14	Specific value	0, 1, 48, 49	Nothing to do
Display number	0	MSW15	0	0-255	--

<Function 04> **US (E *pL pH n a***

[Format]

ASCII	US	(	E	*pL*	*pH*	*n*	*a*
Hex	1F	28	45	*02*	*00*	*04*	*a*
Decimal	31	40	69	*2*	*0*	*4*	*a*

[Range] ($p_L + p_H \times 256$) = 2 (p_L = 2, p_H = 0)
n = 4
a = 10 through 16

[Description]
- Transmits the setting value(s) of the memory switch specified by *a*.

Transmitted data	Hex	Decimal	Number of data
① Header	57H	87	1 byte
② Flag	24H	36	1 byte
③ Display number	30 – 39H	48 – 57	0 – 2 bytes
④ Separate code	1FH	31	1 byte
⑤ Data	30 or 31H	48 or 49	8 bytes
⑥ NUL	00H	0	1 byte

- Configuration of data as shown in ⑤ is transmitted as 8 bytes.
  The setting data in the memory switch [Off: Hex=30H / Decimal=48, On; Hex=31H / Decimal=49] or a data string in the decreasing order from bit 8 to bit 1 as follows:

  Example:

Switch	Msw10-8	Msw10-7	Msw10-6	Msw10-5	Msw10-4	Msw10-3	Msw10-2	Msw10-1
Status	OFF	OFF	OFF	ON	OFF	OFF	ON	ON

  Transmit data for the memory settings above are 8 bytes of “00010011” (30H, 30H, 30H, 31H, 30H, 30H, 31H, 31H).

5.5 Ignored Commands

The DM-D210 customer display ignores the following ESC/POS commands:

US C *n* (Specify on/off of annunciator)

5.6 Unconditional Transmitted Commands

When the DM-D210 receives the following command, the DM-D210 transmits the same data regardless of the conditions of DSR.

DLE xx (real-time command)

Data is transmitted if the following codes are transmitted after the **DLE** command.

00H–08H, 10H, 12H, 14H

APPENDIX. SIGNALS CONNECTION BETWEEN DM AND PC

Use a cable which connects signals as shown below using a DTR-DSR handshaking method between the customer display and the host PC.